ASSY REV	DESCRIPTION	APPROVED	DATE
TBD	RELEASE.	LAS	5/7/08

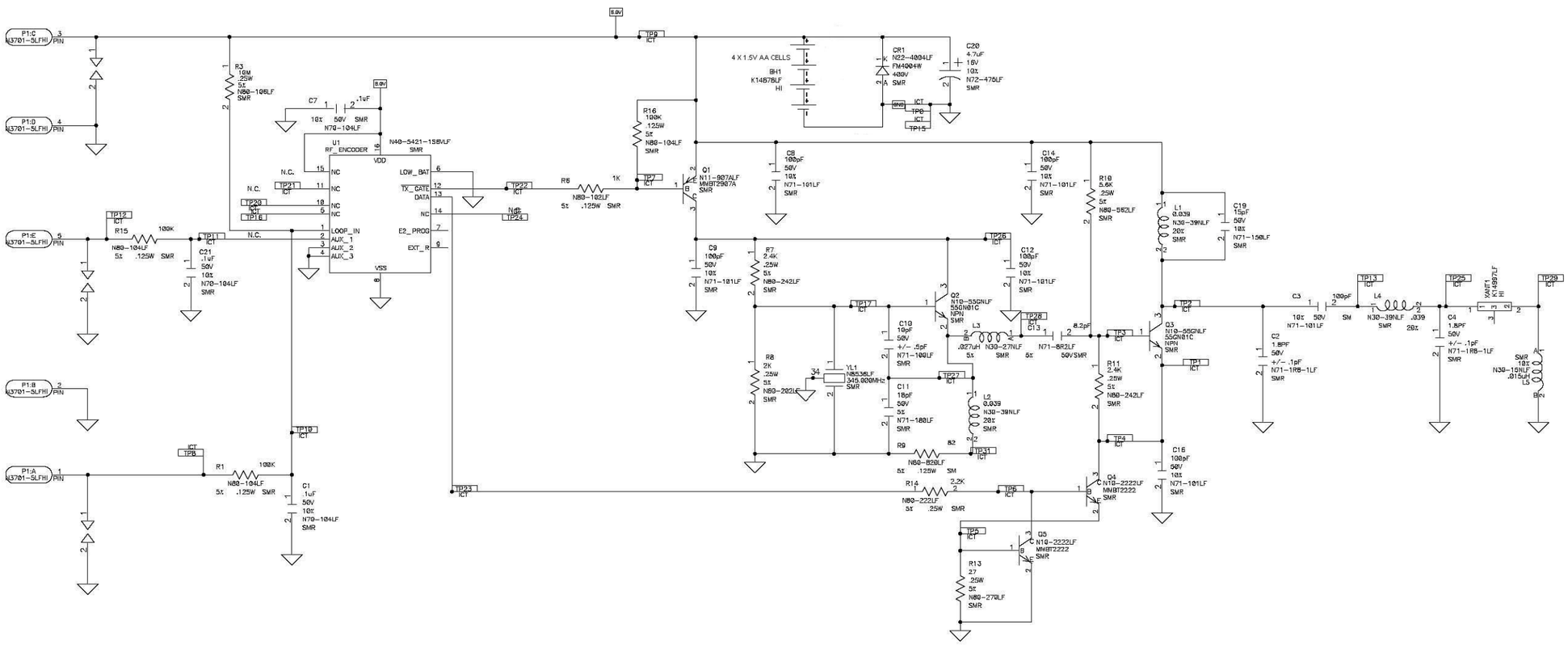

APPROVALS	DATE
PROJECT ENG. KEN ESKILDSEN	
ELECTRICAL ENG. Y. MOHAMMED	
MFG. ENG. PETER SACHS	
IN CIRCUIT TEST ENGR. MUNIR SIDDQ	
FUNCTIONAL TEST ENGR. TONY VULTAGGIO	
CREATED BY: L.STERNSTEIN	

Honeywell
2 CORPORATE CENTER DR.
MELVILLE, NEW YORK 117947

PCB (REF) 200-00120 REV.B

TITLE DOOR/WINDOW TX

DRAWING NUMBER SA5890-ODLF

COMPUTER FILE NAME SA5890-ODLF.SCH

DATE: 5/7/08 SHEET 1 OF 1