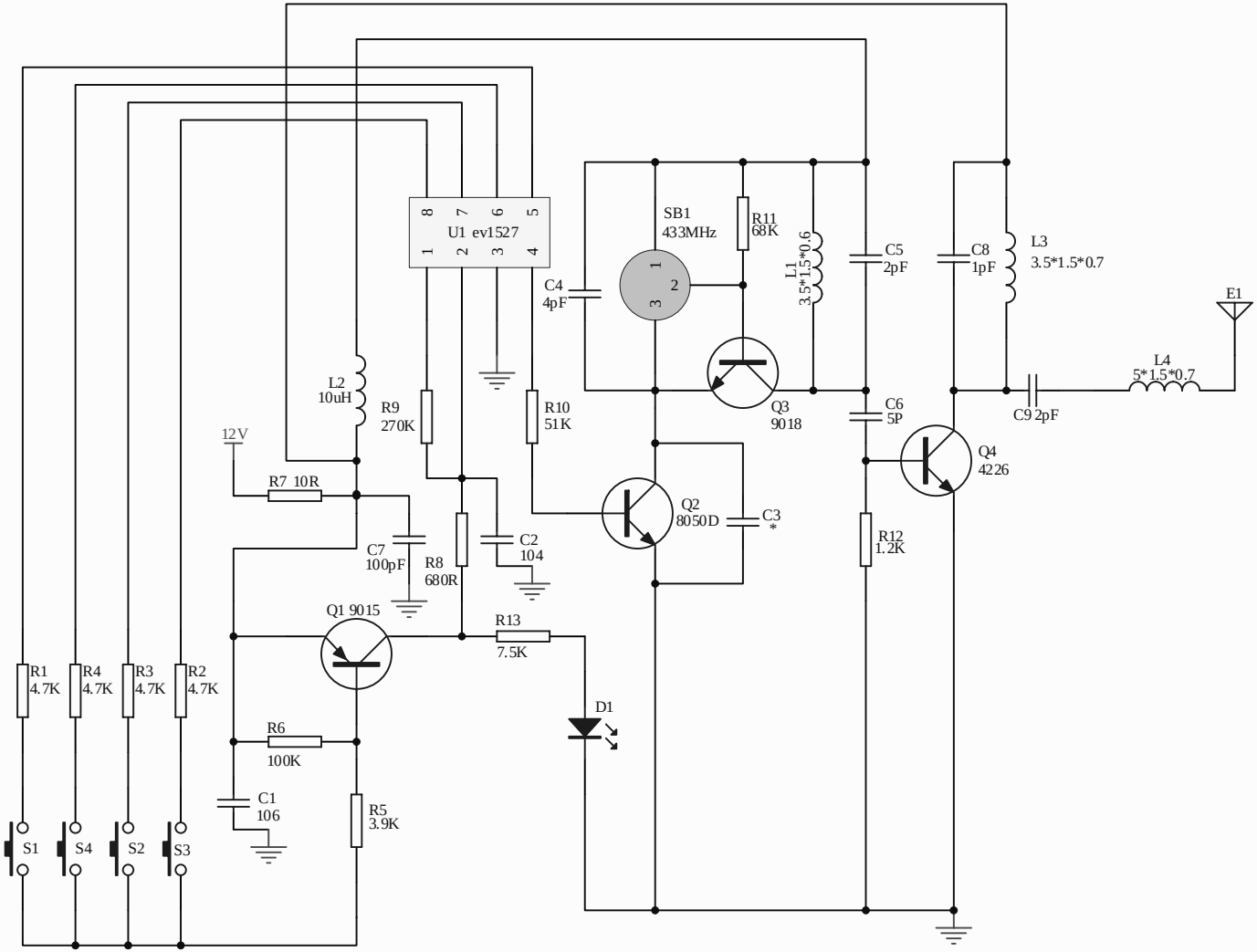

Title		
Size A4	Number	Revision
Date: 2011-5-25		Sheet of
File: C:\Documents and Settings\..\Sheet1.Sch		Drawn By: