DWG. NO.	REV.
28C15843	—

REVISIONS				
LTR	ECN	DESCRIPTION	DATE	APPVD.
0		REL TO PROD		

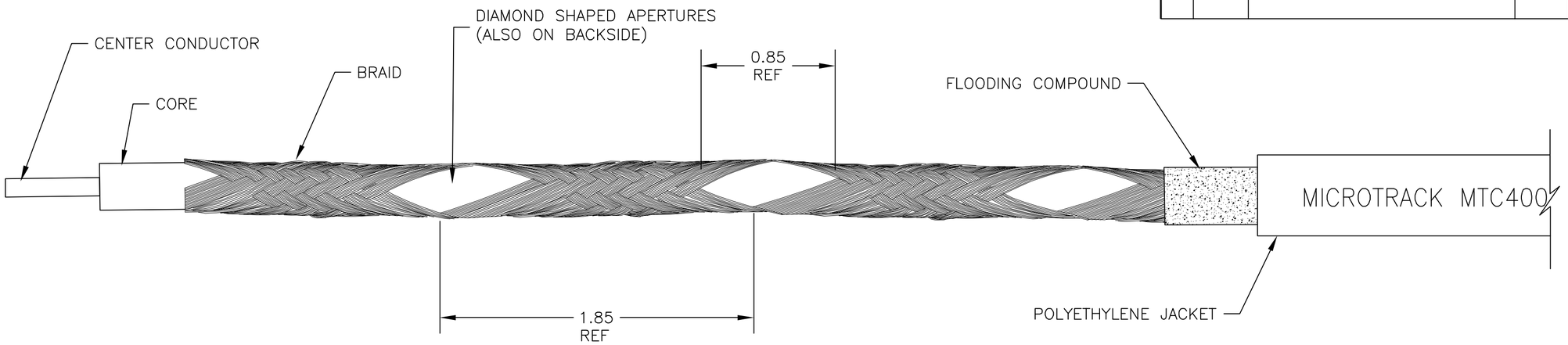

CABLE SPECIFICATIONS:

CENTER CONDUCTOR 0.0907 INCHES (11 AWG – TINNED COPPER SOLID)

CORE DIAMETER 0.285 ± 0.006 INCHES

CORE TYPE FOAMED POLYETHYLENE, CROSS–LINKED DIELECTRIC CONSTANT = 1.88 ± 1%

BRAID NOTE: CABLE MADE USING A 24 CARRIER BRAIDER

STRAND DIAMETER 0.0080 INCHES (32 AWG TINNED COPPER)

CARRIERS 6 x 8 (USE ADJACENT CARRIERS)

ENDS 8

PITCH 6.50 PICKS PER INCH

WEAVE ANGLE 27.5 DEGREES

OPTICAL COVERAGE 80%

WATER BARRIER
APPLY VISTANEX FLOODING COMPOUND (BASF CORPORATION) TO COMPLETELY COVER BRAID AT THE RATE OF APPROXIMATELY 10.6 POUNDS/1000 FEET.

JACKET HIGH DENSITY POLYETHYLENE, CROSS–LINKED, RED (PMS–186C) WITH UV STABILIZER, 0.405" O.D.
NOTE: JACKET TO BE LASER PRINTED (BLACK) ALONG ENTIRE LENGTH AT 1 METER INTERVALS WITH "MICROTRACK MTC400–SOUTHWEST MICROWAVE INC.–U.S. PATENT #6.577.236"

TEMPERATURE
RANGE – – – – – –40°C TO +70°C.

MINIMUM BENDING
RADIUS – – – – – 6 INCHES.

PACKAGING:

PACKAGING OPTION	LENGTH +0% –1%		WEIGHT (APPROXIMATE)	
	METER	FEET	KILOGRAMS	POUNDS
205 meter	205	672'6"	39	85
105 meter	105	344'6"	21	45

– MINIMUM REEL CORE DIAMETER 12 INCHES
– BOTH ENDS TO BE EXPOSED 12 INCHES MINIMUM

TESTING REQUIRED

TEST 1 – CONTINUITY
TEST 2 – SHORTS
TEST 3 – PHYSICAL
TEST 4 – SPARK TEST

CABLE ELECTRICAL PROPERTIES

IMPEDANCE – 50 ± 2.0 OHM

VELOCITY OF PROPAGATION – – – – – – – – – – – – – – – – 73% ± 1%

DC RESISTANCE
CENTER CONDUCTOR – – – – – – – – – – – – – – – – – – 1.260 OHMS/1000', 0.85 OHMS/205m
BRAID – 1.87 OHMS/1000', 1.26 OHMS/205m

ATTENUATION – LESS THAN 10 dB/205 m AT 25 MHz

UNLESS OTHERWISE SPECIFIED ALL DIMS. ARE IN INCHES AND AFTER PLATING. ALL ANGLES ARE DEGREES.
1. √ ——— ALL OVER UOS
2. DEC TOL .XX± 0.02
3. DEC TOL .XXX± 0.010
4. ANGULAR TOL± 1°
5. ALL PARTS TO BE FREE OF BURRS & SHARP EDGES

		DRAWN	DATE	APPLIED FINISH
		CHKD.	DATE	
NEXT ASSEMBLY	USED ON	ENG.	DATE	MATERIAL
APPLICATION		MFG.	DATE	

–205	CABLE,LEAKY COAX,MTC400, 205 METER
–105	CABLE,LEAKY COAX,MTC400, 105 METER
–A01	CABLE,LEAKY COAX, MTC400

SOUTHWEST MICROWAVE
Southwest Microwave, Inc.
9055 South McKemy Street
Tempe, Arizona 85284–2946 U.S.A.
Telephone (480) 783–0201

TITLE CABLE, LEAKY COAXIAL, MTC400 –MICROTRACK

SCALE	DWG. NO.	REV.
NONE	28C15843	0yy
SHEET 1 OF 1		