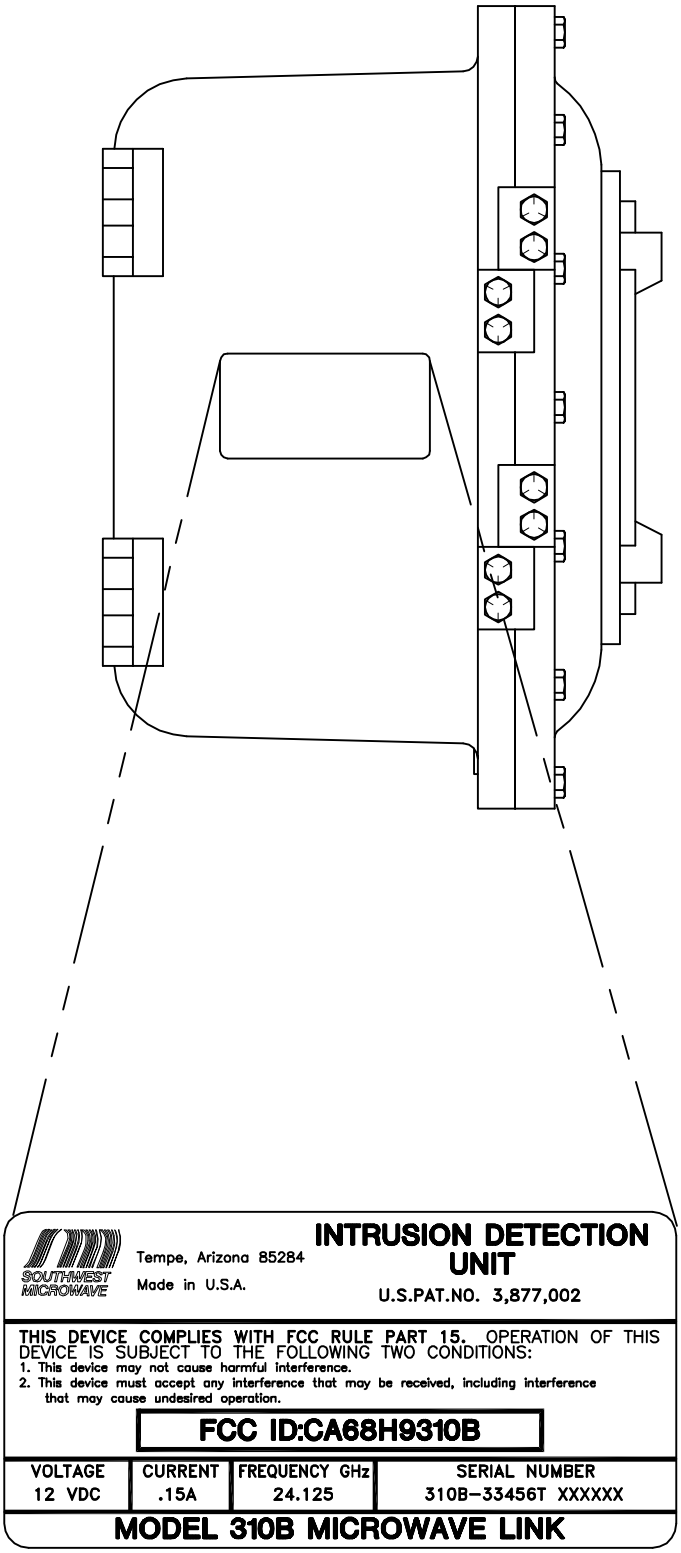

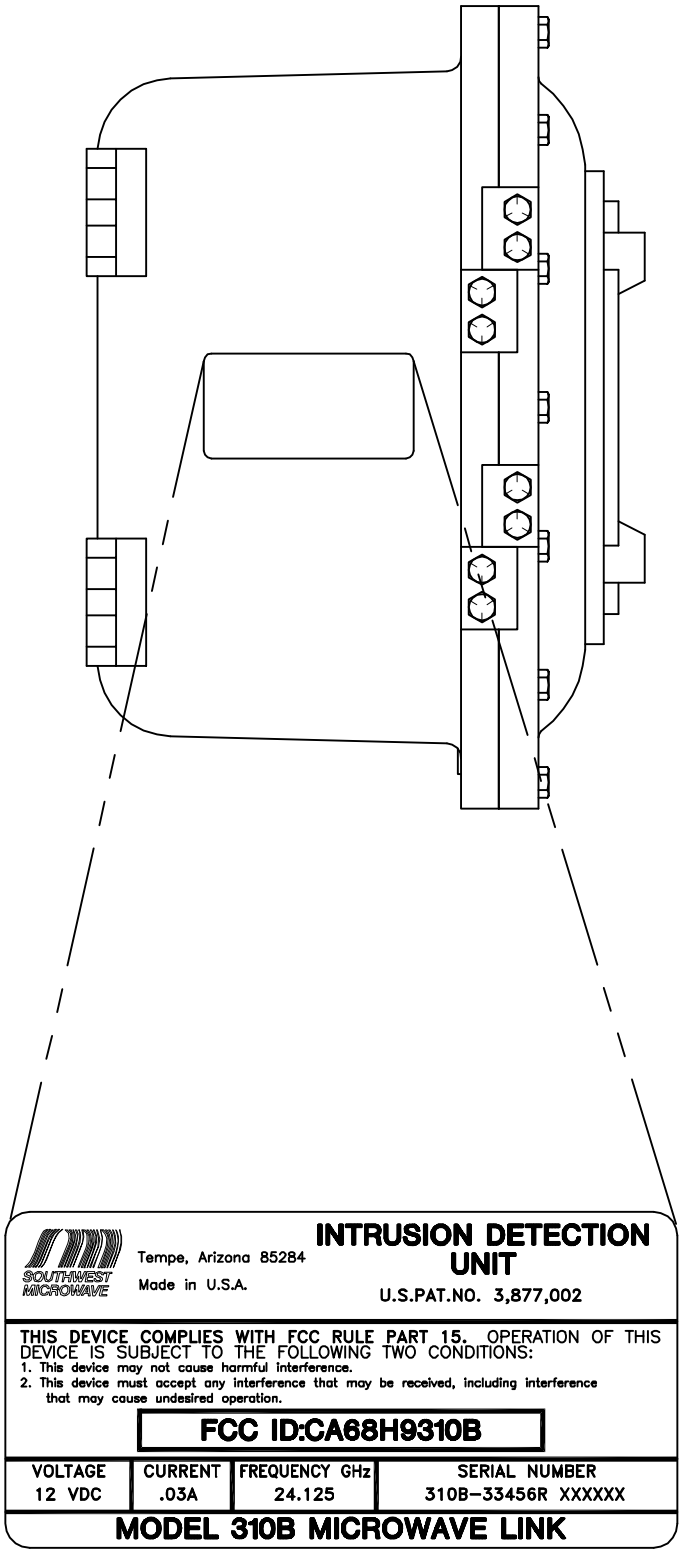

LEFT SIDE VIEW

MODEL 310B-33456 TRANSMITTER & RECEIVER, EXHIBIT I