ECO NUMBER	REVISION	DRAFTER	DESCRIPTION OF CHANGE/RELEASE	DATE	APPROVAL
XXXX	X	DVo	PILOT RELEASE	XX-XX-XX	

DRAWING NO. 6300083 SHEET 1

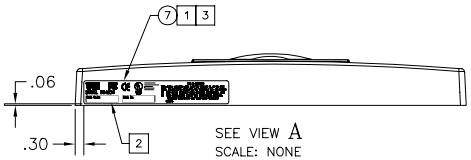

SEE VIEW A
SCALE: NONE

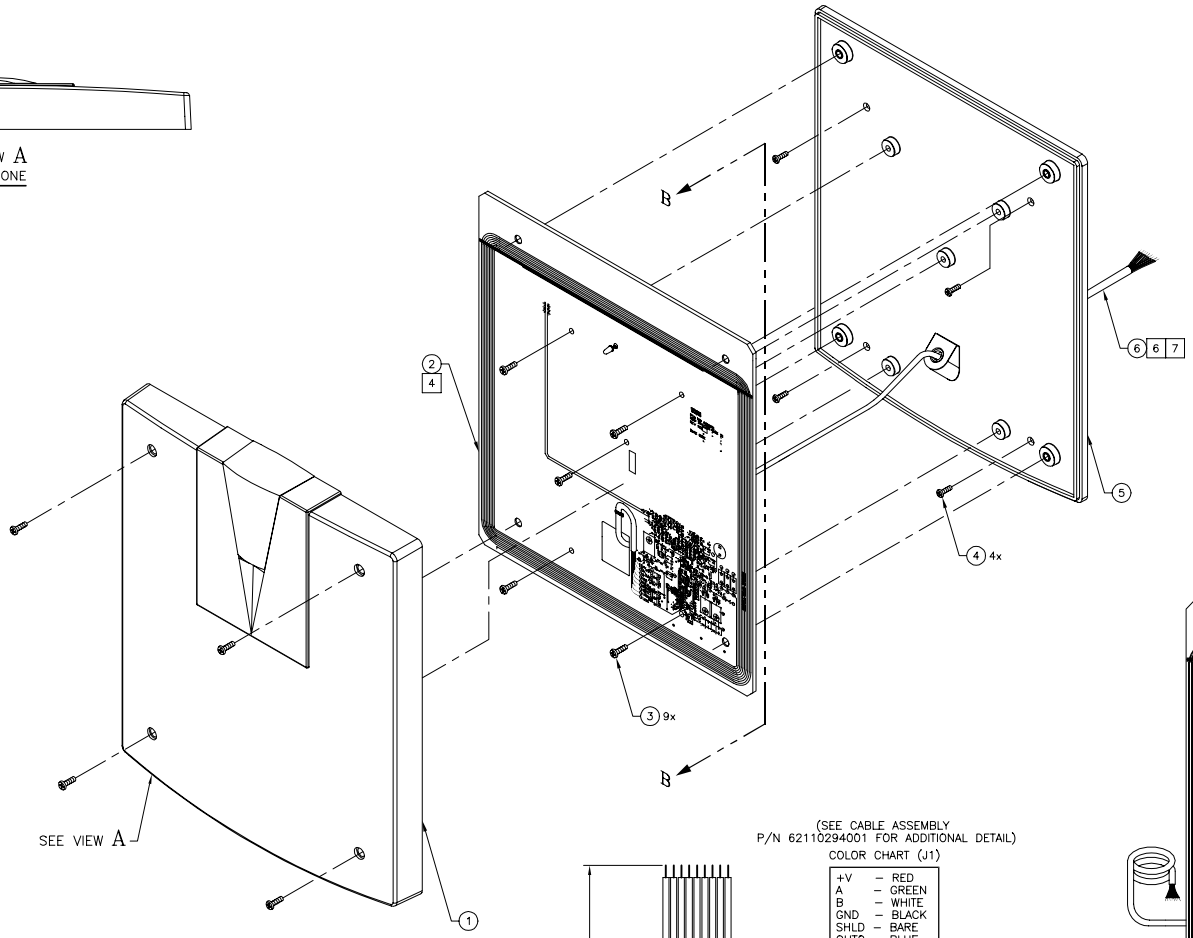

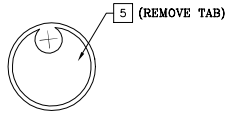

DETAIL "C"
SCALE: NONE

(SEE CABLE ASSEMBLY
P/N 62110294001 FOR ADDITIONAL DETAIL)

COLOR CHART (J1)

+V	–	RED
A	–	GREEN
B	–	WHITE
GND	–	BLACK
SHLD	–	BARE
OUT0	–	BLUE
OUT1	–	ORANGE
LED0	–	YELLOW
LED1	–	BROWN

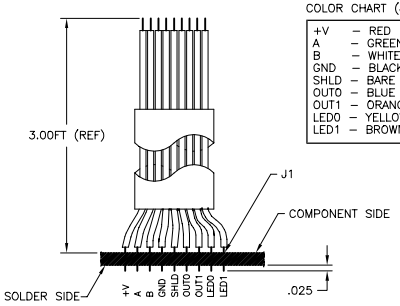

VIEW D–D
ROTATED 90° CW
SCALE: NONE

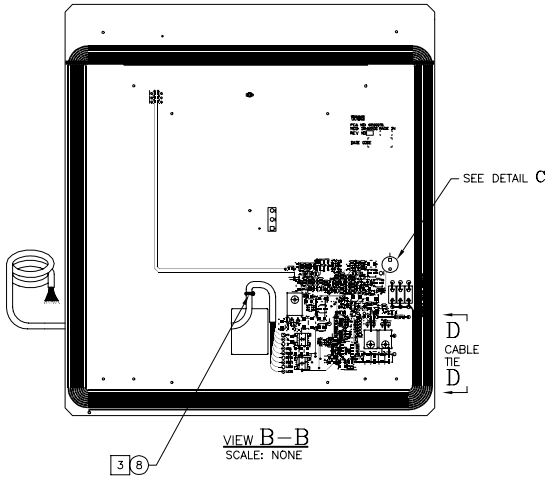

VIEW B–B
SCALE: NONE

7 ROUTE CABLE ASSEMBLY THROUGH CASE AS SHOWN.
6 NEATLY COIL PROTRUDING "PIGTAIL", AND SECURE TO BACK OF UNIT.
5 TO BE DONE AFTER CONFORMAL COAT PROCESS.
4 CONFORMAL COAT PER SPEC. #75XXXXX.
3 TO BE DONE BEFORE CONFORMAL COAT PROCESS.
2 PERMANENTLY MARK WITH THE SAME DATE CODE AS PCB.
1 CLEAN SURFACE WITH ALCOHOL OR EQUIVALENT CLEANING SOLUTION, PEEL AND AFFIX APPROX, WHERE SHOWN.

NOTES: (UNLESS OTHERWISE SPECIFIED)

UNLESS OTHERWISE SPECIFIED DIMENSIONS ARE IN(MM)
.XX ± .01(.762)
.XXX ± .010(.254)
∠ ± ∨

TOLERANCE T DIMENSIONS PER ANSI Y14.5
DO NOT SCALE DRAWING DUE TO PLOTTER/COPIER

THIS DRAWING AND THE CONFIDENTIAL AND TRADE SECRET INFORMATION SET FORTH HEREIN, IS THE PROPERTY OF WSE AND SHALL NOT BE REPRODUCED, COPIED, OR USED FOR ANY PURPOSE OTHER THAN THE PURPOSE FOR WHICH IT IS GIVEN BY WSE IS STRICTLY PROHIBITED.

IF CAD GENERATED, DO NOT CHANGE VELLUM WITHOUT CHANGING THE DATABASE!

WSE
47102 Mission Falls Court
Fremont, CA 94539-7616
an ISO 9001 certified company

MATERIAL: SEE SEPARATE PARTS LIST

COATING:

DRAWN BY: DVo DATE: 03-10-01
CHKD: DATE:
ENGR: DATE:
PROJ ENGR: DATE:

TITLE: ASSY, MECHANICAL, DR4220

SIZE	CODE IDENT. NO.	DRAWING NO.	REVISION
D		6300083	X

SCALE FACTOR: NONE FILE NAME: 6300083–X.dwg SHEET 1 of 1