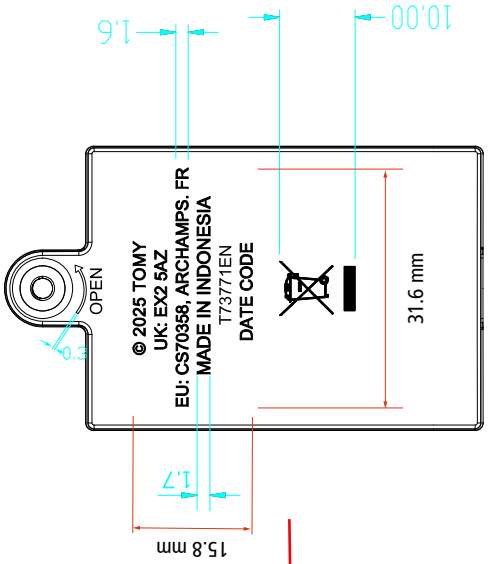

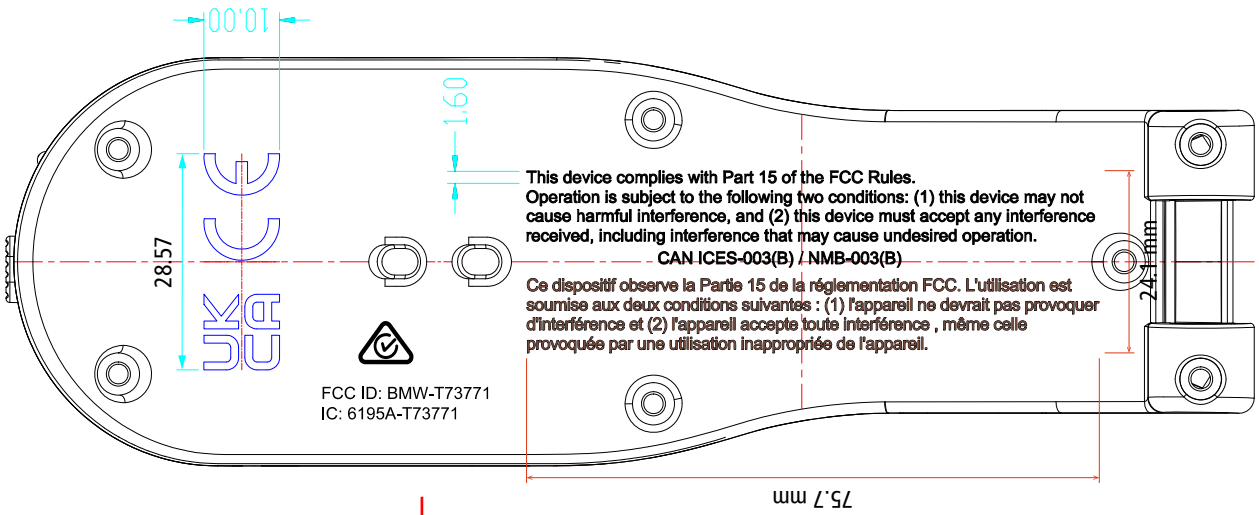
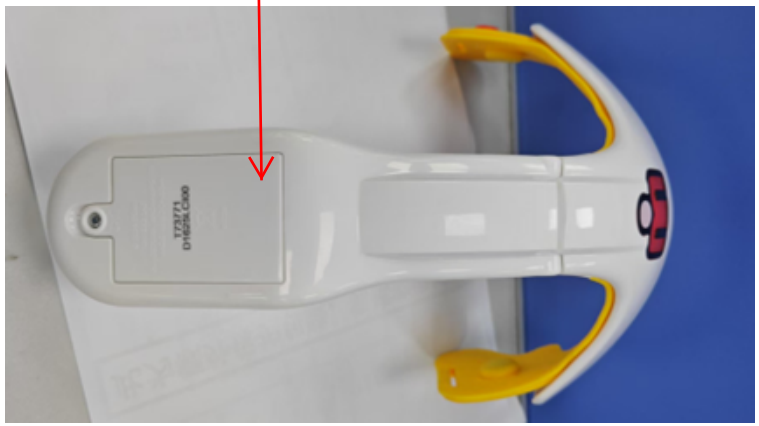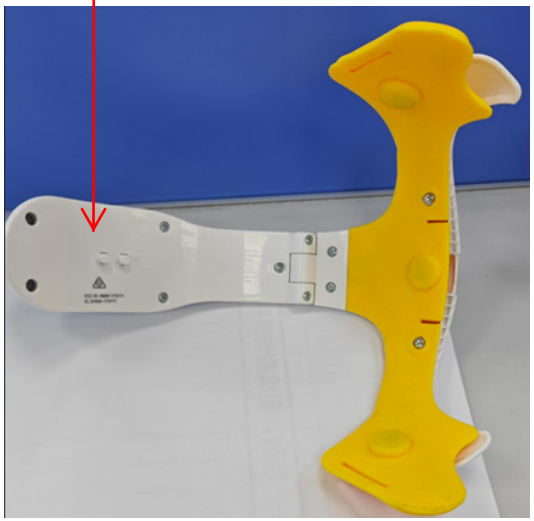
Label Location