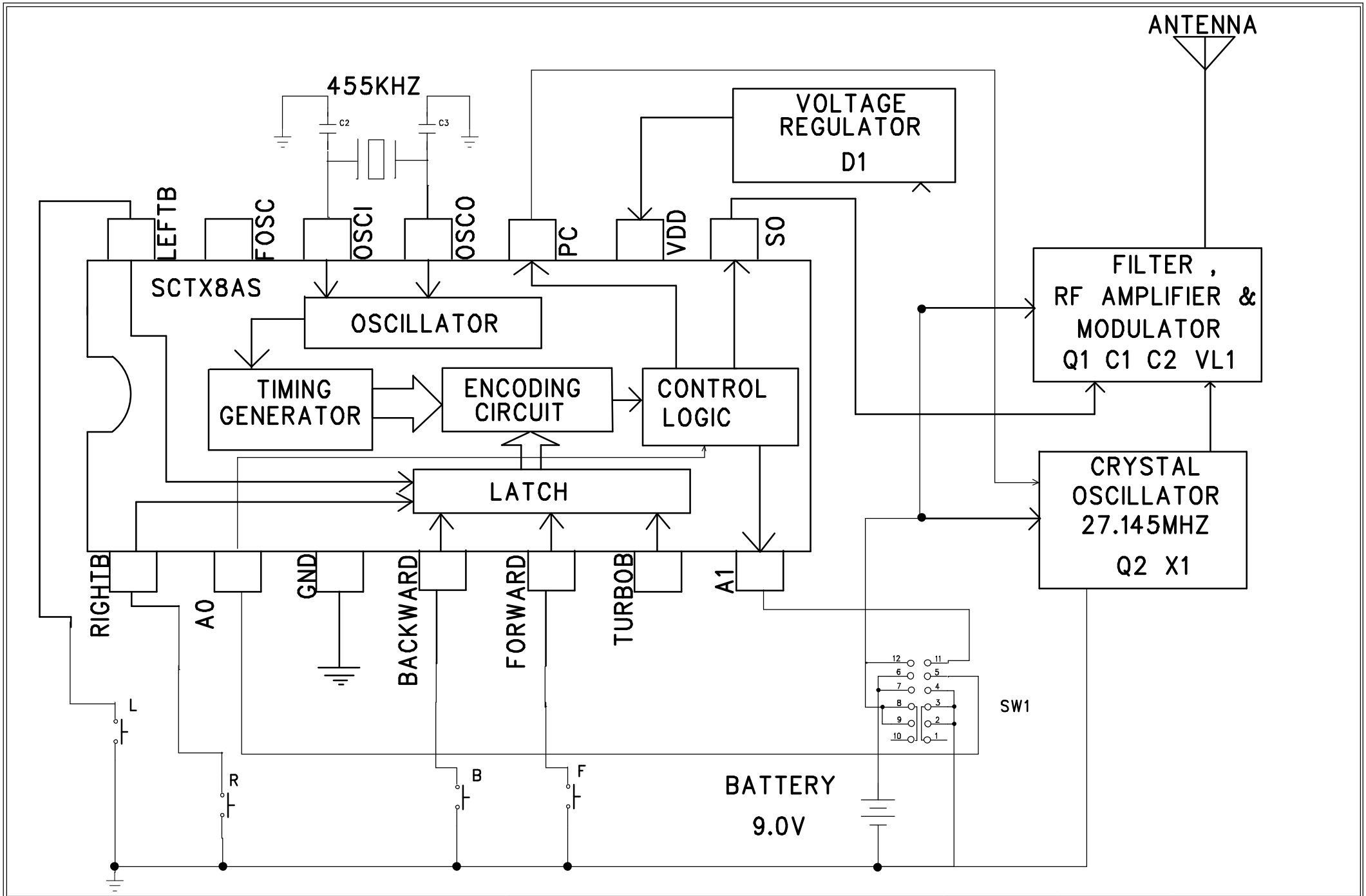

LUNG CHEONG	TITLE:	72016A/72017A/72020A (27M)	DESIGN BY:	DRAWING BY:	APPROVED BY:	SHEET:
	FUNCTION:	TX BATTLE SLAM	XGW	XGW	QW SHI	1 of 1
	DWG NO:		MAR 2 2007	2007-03-03	2007-03-03	