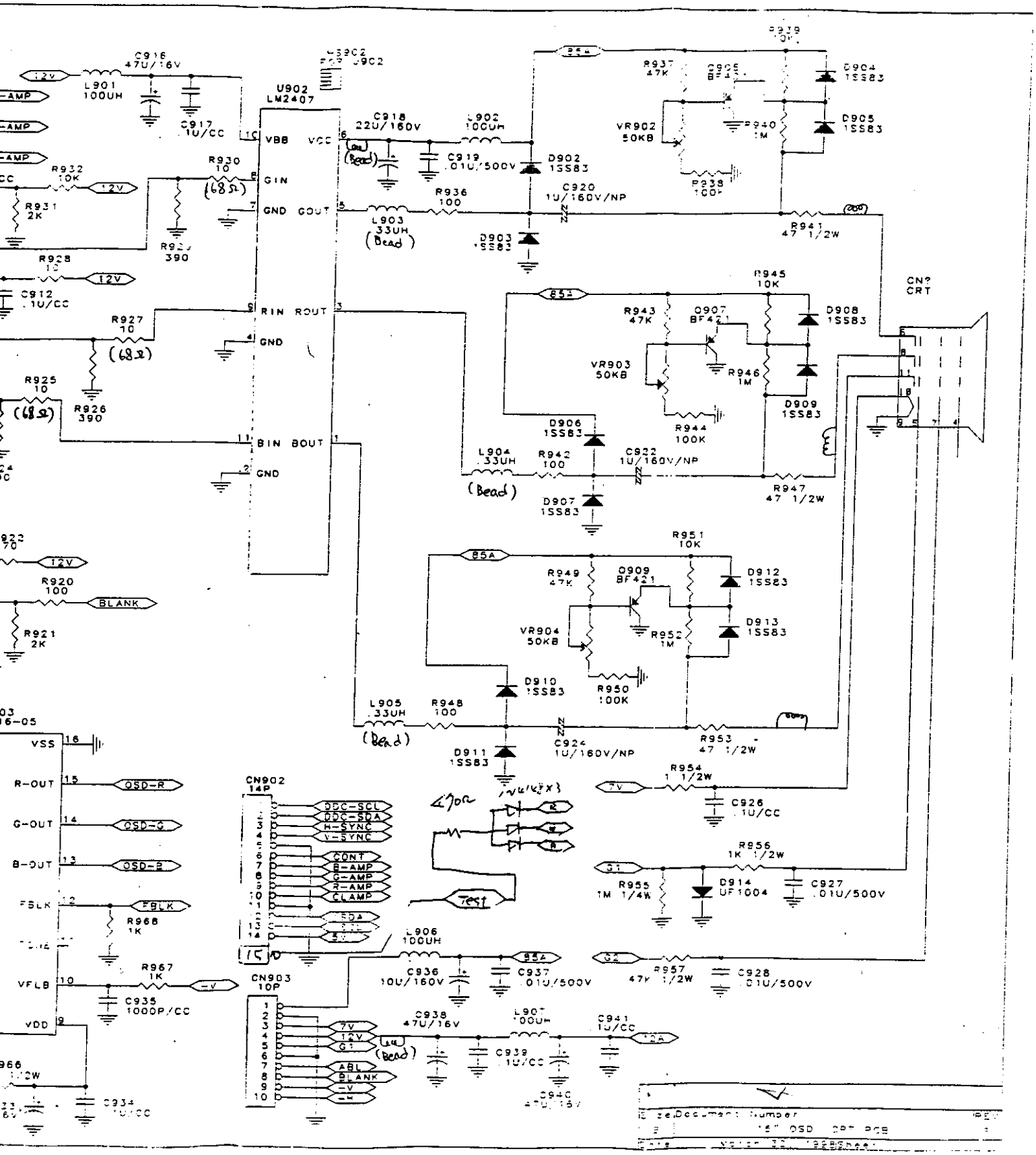
U902
LM2407
VBB
VCC
GIN
GND
GOUT
RIN
ROUT
GND
BIN
BOUT
GND
C916
47U/16V
L901
100UH
C917
.1U/CC
C918
220U/160V
L902
100UH
C919
.01U/500V
D902
1SS83
C920
1U/160V/NP
R936
100
L903
33UH
(Bead)
D903
1SS83
R941
47 1/2W
R930
10
(68Ω)
R932
10K
R931
2K
R928
10
C912
.1U/CC
R927
10
(68Ω)
R925
10
(68Ω)
R926
390
R920
100
BLANK
R921
2K
R937
47K
C905
BF421
D904
1SS83
D905
1SS83
VR902
50KB
R940
1M
R938
100K
R945
10K
R943
47K
Q907
BF421
D908
1SS83
VR903
50KB
R946
1M
D909
1SS83
R944
100K
D906
1SS83
L904
33UH
R942
100
C922
1U/160V/NP
D907
1SS83
R947
47 1/2W
CN?
CRT
R951
10K
R949
47K
Q909
BF421
D912
1SS83
VR904
50KB
R952
1M
D913
1SS83
R950
100K
D910
1SS83
L905
33UH
R948
100
(Bead)
D911
1SS83
C924
1U/160V/NP
R953
47 1/2W
R954
1 1/2W
C926
.1U/CC
R956
1K 1/2W
R955
1M 1/4W
D914
UF1004
C927
.01U/500V
R957
47K 1/2W
C928
.01U/500V
VSS
R-OUT
G-OUT
B-OUT
FSLK
VFLB
VDD
OSD-R
OSD-G
OSD-B
FBLK
R968
1K
R967
1K
C935
1000P/CC
C934
.1U/CC
CN902
14P
DDC-SCL
DDC-SDA
H-SYNC
V-SYNC
CONT
B-AMP
G-AMP
R-AMP
CLAMP
SDA
Test
L906
100UH
C936
10U/160V
C937
.01U/500V
CN903
10P
7V
12V
G1
ABL
BLANK
-V
-H
C938
47U/16V
L907
100UH
C939
.1U/CC
C941
.1U/CC
C940
47U/16V
Document Number
"15" OSD CRT PCB

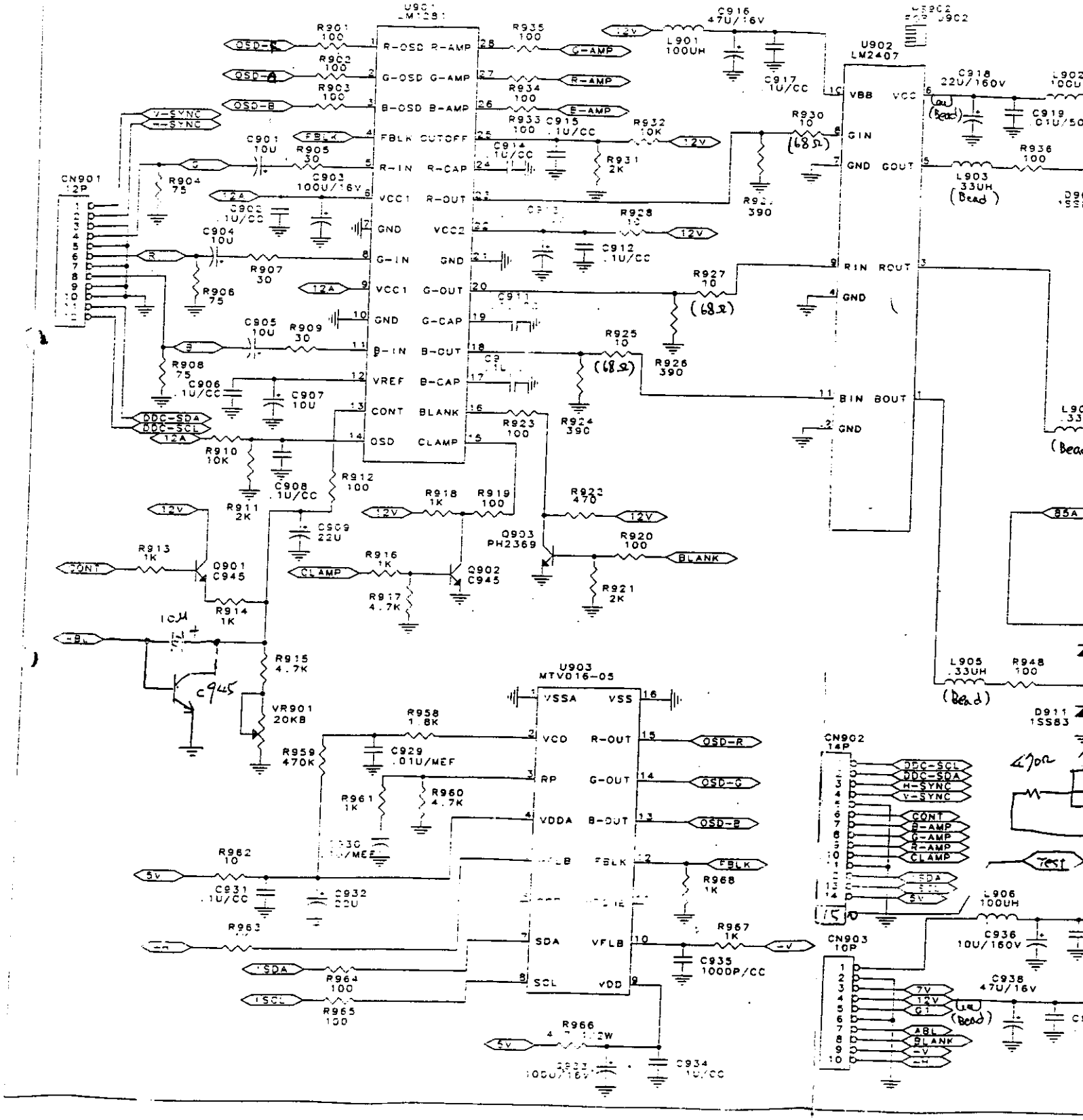
U901
LM1281
R-OSD R-AMP
G-OSD G-AMP
B-OSD B-AMP
FBLK CUTOFF
R-IN R-CAP
VCC1 R-OUT
GND VCC2
G-IN GND
VCC1 G-OUT
GND G-CAP
B-IN B-OUT
VREF B-CAP
CONT BLANK
OSD CLAMP
U902
LM2407
VBB VCC
GIN
GND GOUT
RIN ROUT
GND
BIN BOUT
GND
CN901
12P
CN902
14P
CN903
10P
U903
MTV016-05
VSSA VSS
VCO R-OUT
RP G-OUT
VDDA B-OUT
FBLK
SDA VFLB
SCL VDD
Q901
C945
Q902
C945
Q903
PH2369
VR901
20KB
OSD-R
OSD-G
OSD-B
FBLK
BLANK
CLAMP
CONT
DDC-SDA
DDC-SCL
H-SYNC
V-SYNC
R-AMP
G-AMP
B-AMP
12V
5V
-V
-H
7V
G1
ABL
L901
100UH
L903
33UH
(Bead)
L905
.33UH
(Bead)
L906
100UH
D911
1SS83
C945