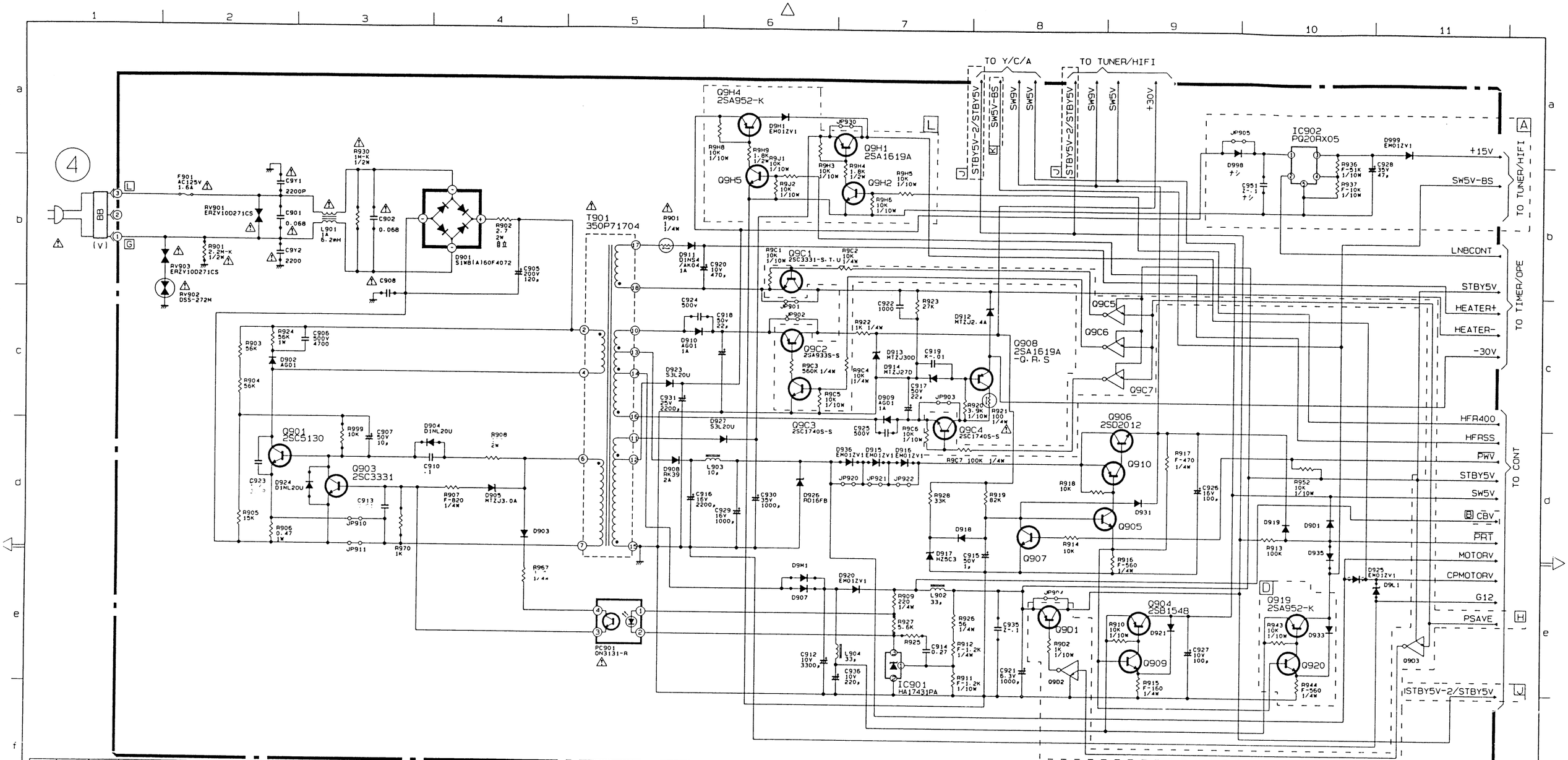

ITEM	REF.	R901	R930	C9Y1	C9Y2	C901	C902	C908	UP901	UP902	UP903	R927	D935	C924 /C925	UP904	C935	R925	UP920	D936	A部	B部		D9M1 /D907	D部		D925		H部	J部	D9L1
	ADDR.	b-2	b-3	b-2	b-2	b-2	b-3	c-3	c-6	c-6	c-7	e-7	d-10	c-5 /c-7	e-8	e-8	e-7	d-7	d-7	a-11	d-11		e-6	e-10		e-10		e-11	D-8 E-11	e-11
1																														
2																														
4			UL	UL	VA1 2200P	VA1 2200P	AC125V/250V 0.068μ	AC125V/250V 0.068μ	VA1 2200P	○	○	○	○	×	560P /560P	○	×	2.2K	○	×	×	○		D907 RK36	×		×		×	STBY5V	×
6																														

ITEM	REF.	R999	R970	D924	D904	JP910	JP911	K部		L部	JP930		R908	R967	C913	C923		UP921	D915	UP922	D916									
	ADDR.	d-3	d-3	d-3	d-4	d-3	d-3	a-8		a-7	a-7		d-4	e-4	d-3	d-3		d-7	d-7	d-7	d-7									
1																														
2																														
4		×	×	×	×	○	×	×		×	○		270	100	0.033μ	2KV 220P		○	×	○	×									
6																														

○ MEANS EMPLOYED
× MEANS NOT EMPLOYED

NOTE HS-U576
UNLESS OTHERWISE SPECIFIED
ALL DIODES ARE 1SS254
ALL NPN TRANSISTORS ARE 2SC1740S-E/2SC5395-G
ALL PNP TRANSISTORS ARE 2SA933S-R.S/2SA1993-E.F

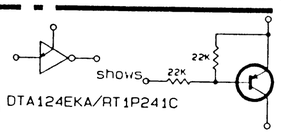

DTA124EKA/RT1P241C

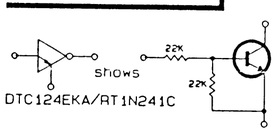

DTC124EKA/RT1N241C

P/L No. T881C970

A	6	POWER	HV-GX100	5.0	X
A	4	POWER	HS-U576	5.0	X
A	2	POWER	HV-G100	5.0	X
A	1	POWER	HV-BH100	5.0	X

HS-U576

改定 CHANGE

HS-U576 POWER

規格 MATERIAL AND DIMENSIONS	(MI) MARK	UNIT CODE	REVISION NO. / APP. FROM
摘要 REMARK			

第3角法 3RD ANGLE PROJECTION	DIM IN mm	尺度 SCALE NTS	作成日付 DATE 1999・06・25
MITSUBISHI ELECTRIC CORPORATION			
作成 DRAWN 村田	概要 CHECKED	設計 DESIGNED 村田	検図 APPROVED

図名 TITLE OF DRAWING: SCHEMATIC-DIAGRAM (2/2)

983B808