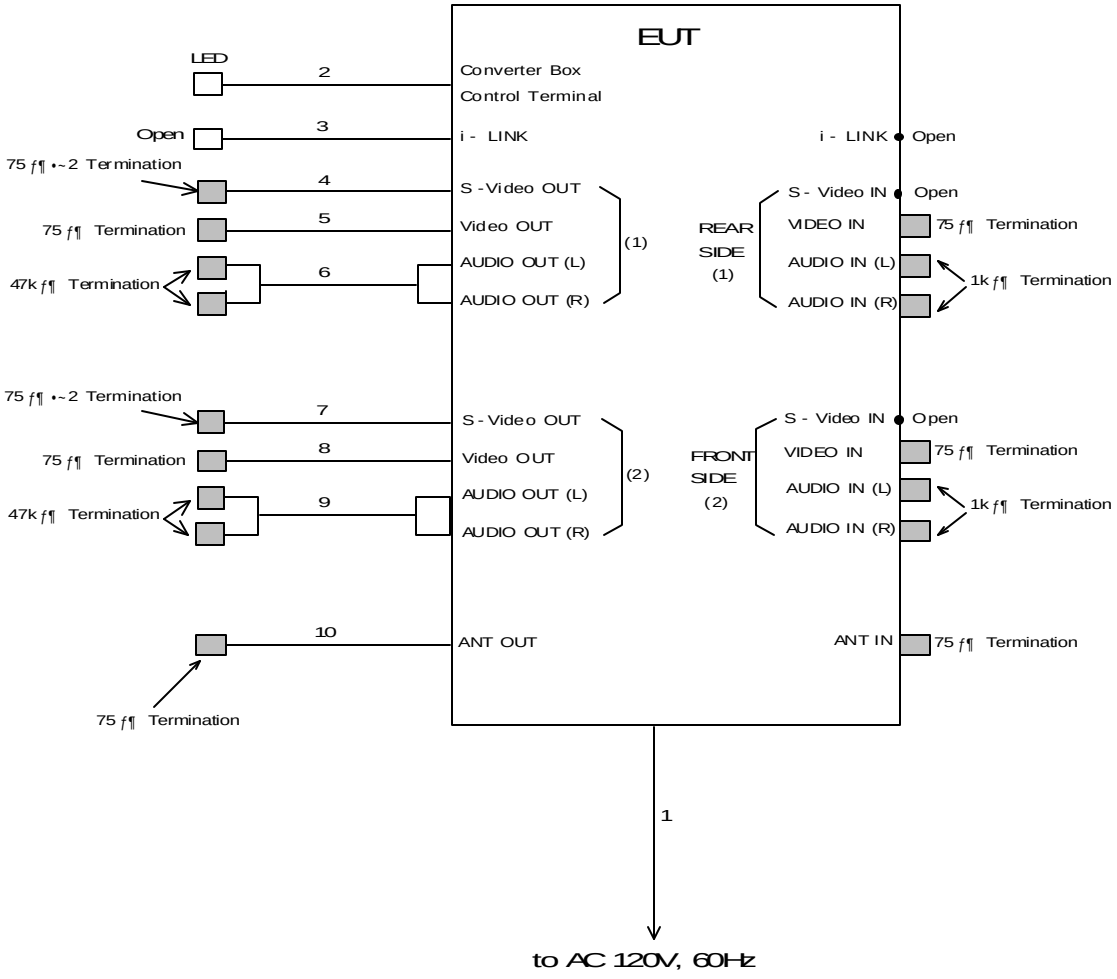3.4. Block Diagram of EUT System