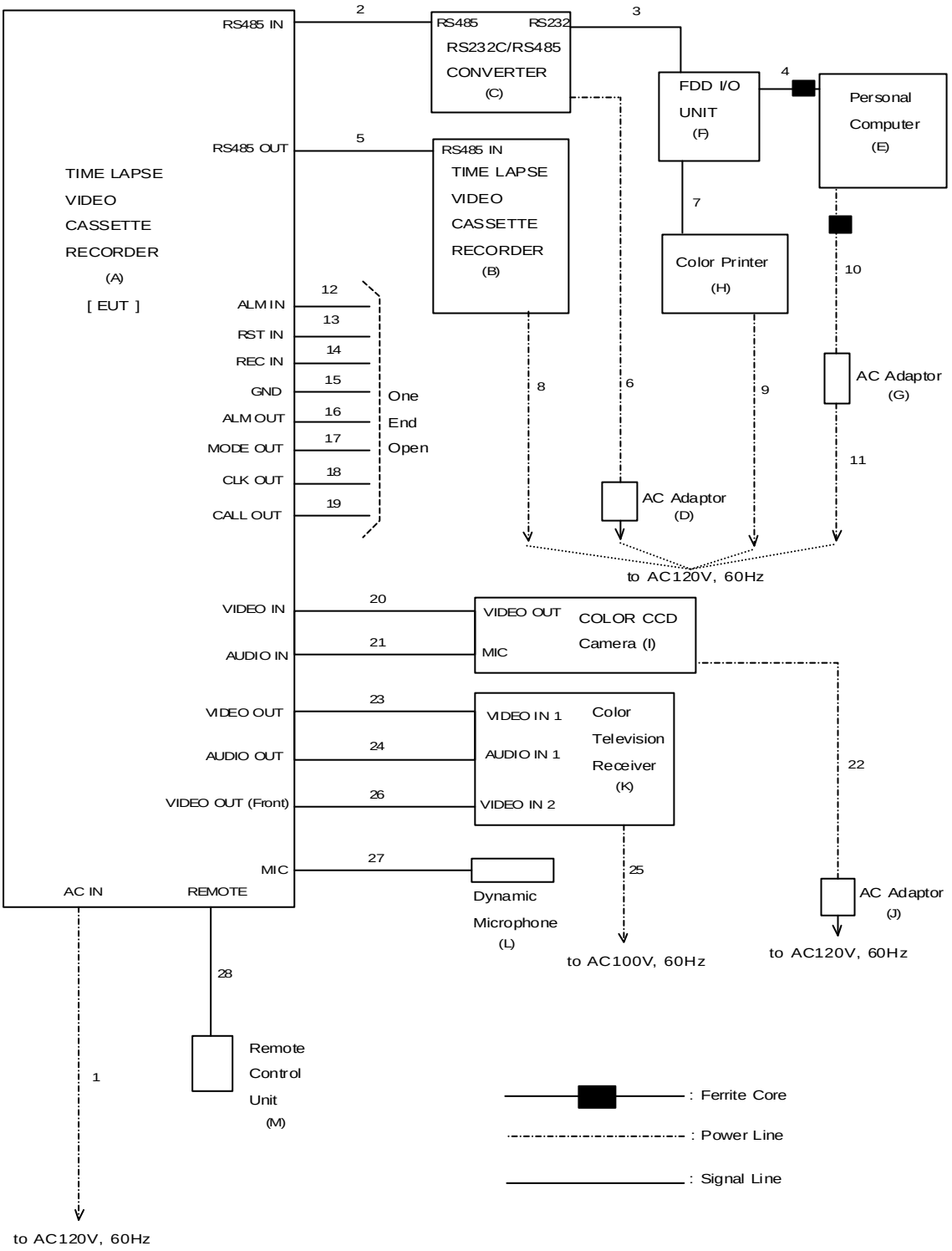Block Diagram of EUT System