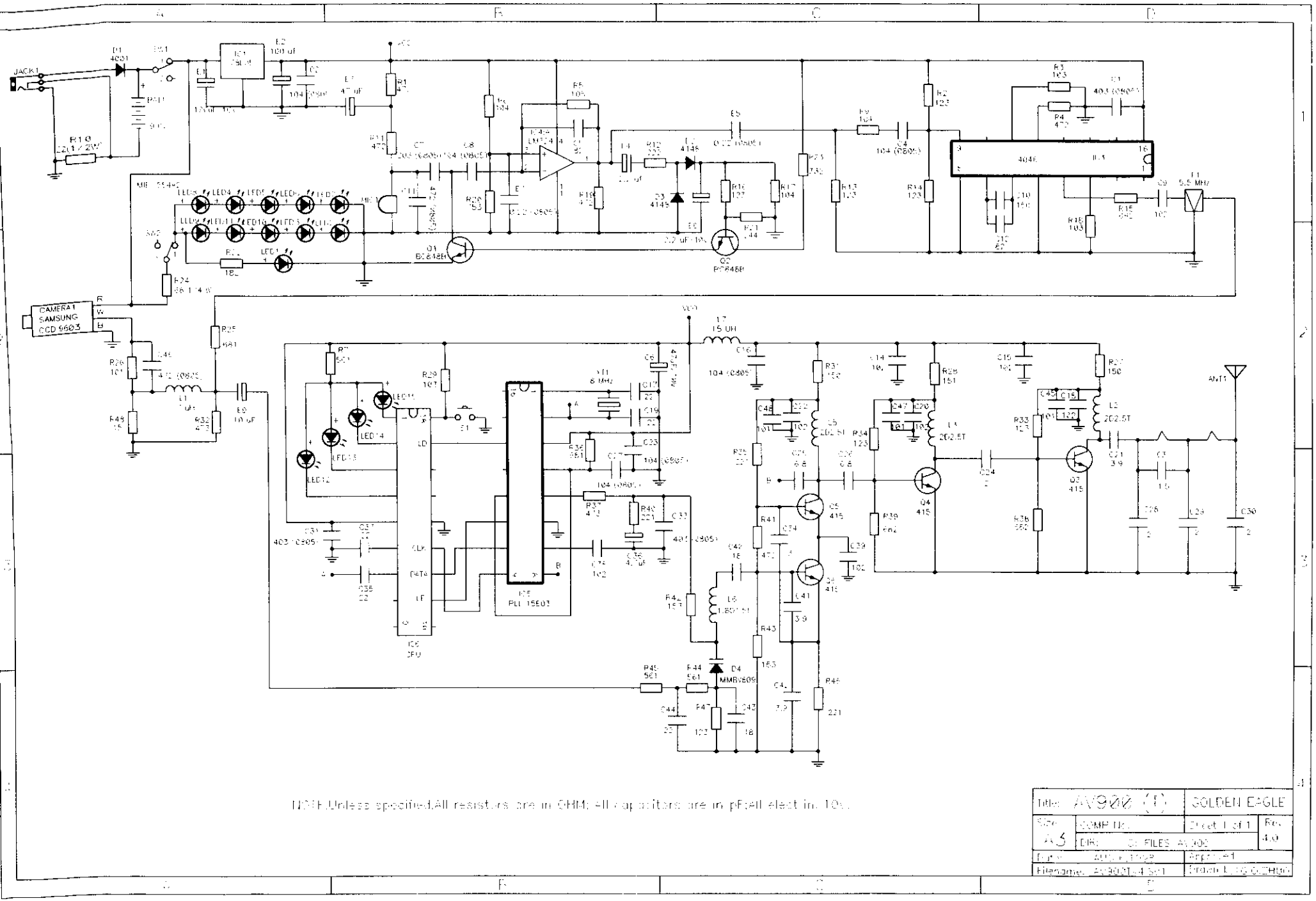


NOTE:Unless specified,All resistors are in OHM; All capacitors are in pF;all elect in 10v.

| | | |
|---|---|---|
| Title: AV900 (T) | | GOLDEN EAGLE |
| Size: A3 | COMP No.: | Sheet 1 of 1 |
| | DIR: C:\FILES\AV900 | Rev: 4.0 |
| Date: 4/05/2002 | | Approved: |
| Filename: AV900T-4.Sch1 | | Drawn By: CHRIS |