FUNCTIONAL BLOCK DIAGRAM OF BFV5M-3-6-8 FRS

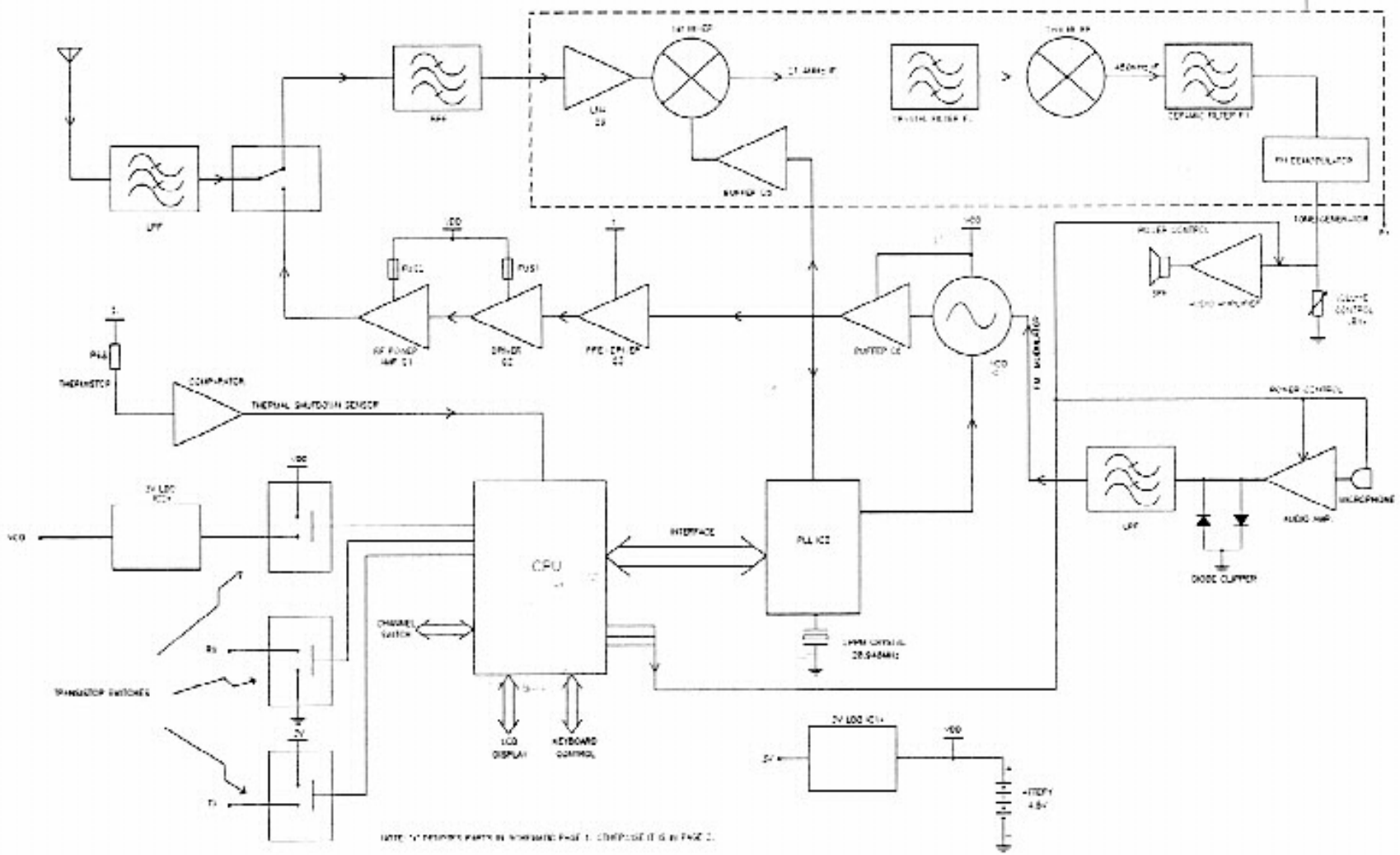

BLOCK DIAGRAM