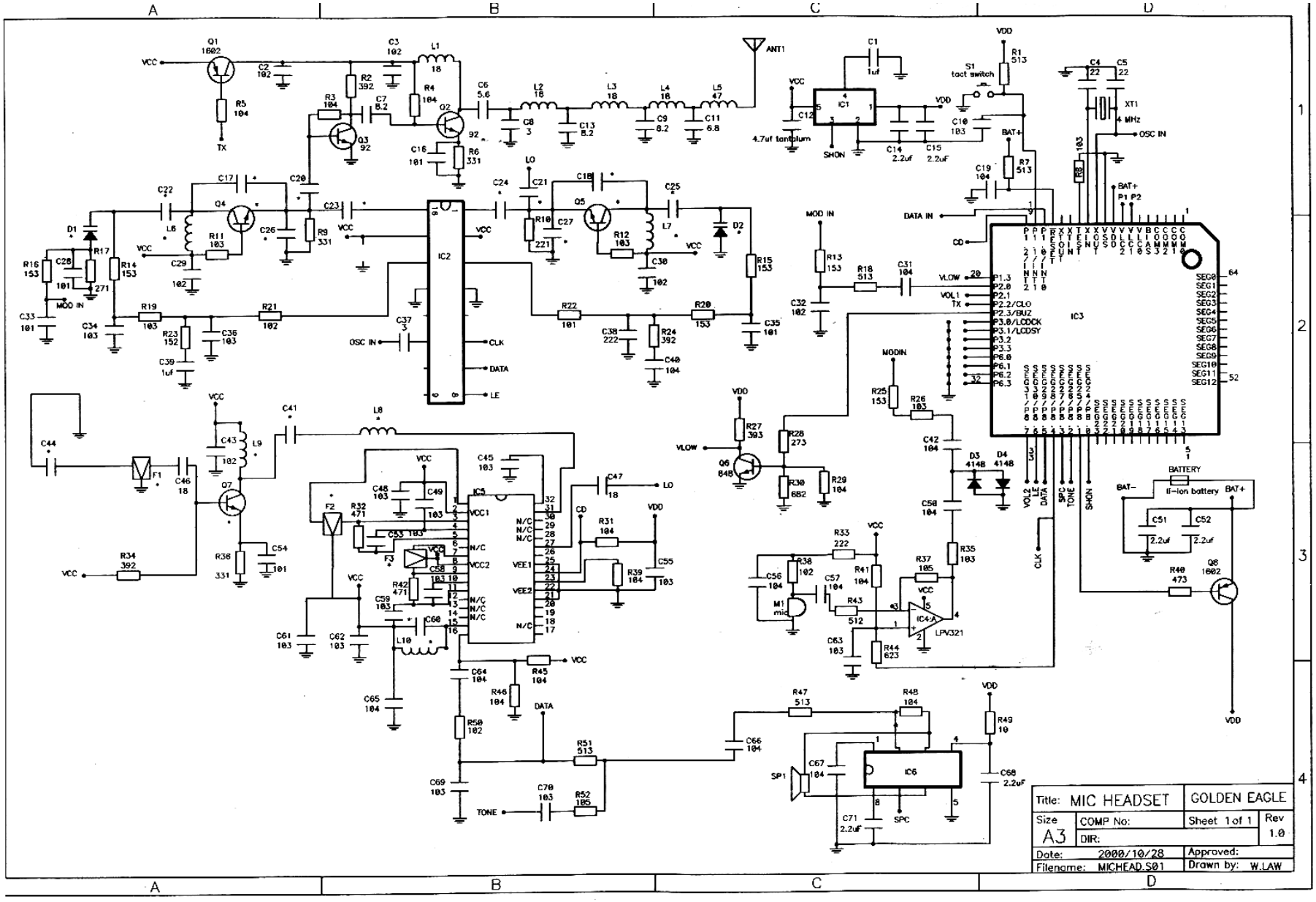SCHEMATIC DIAGRAM OF MIC HEADSET