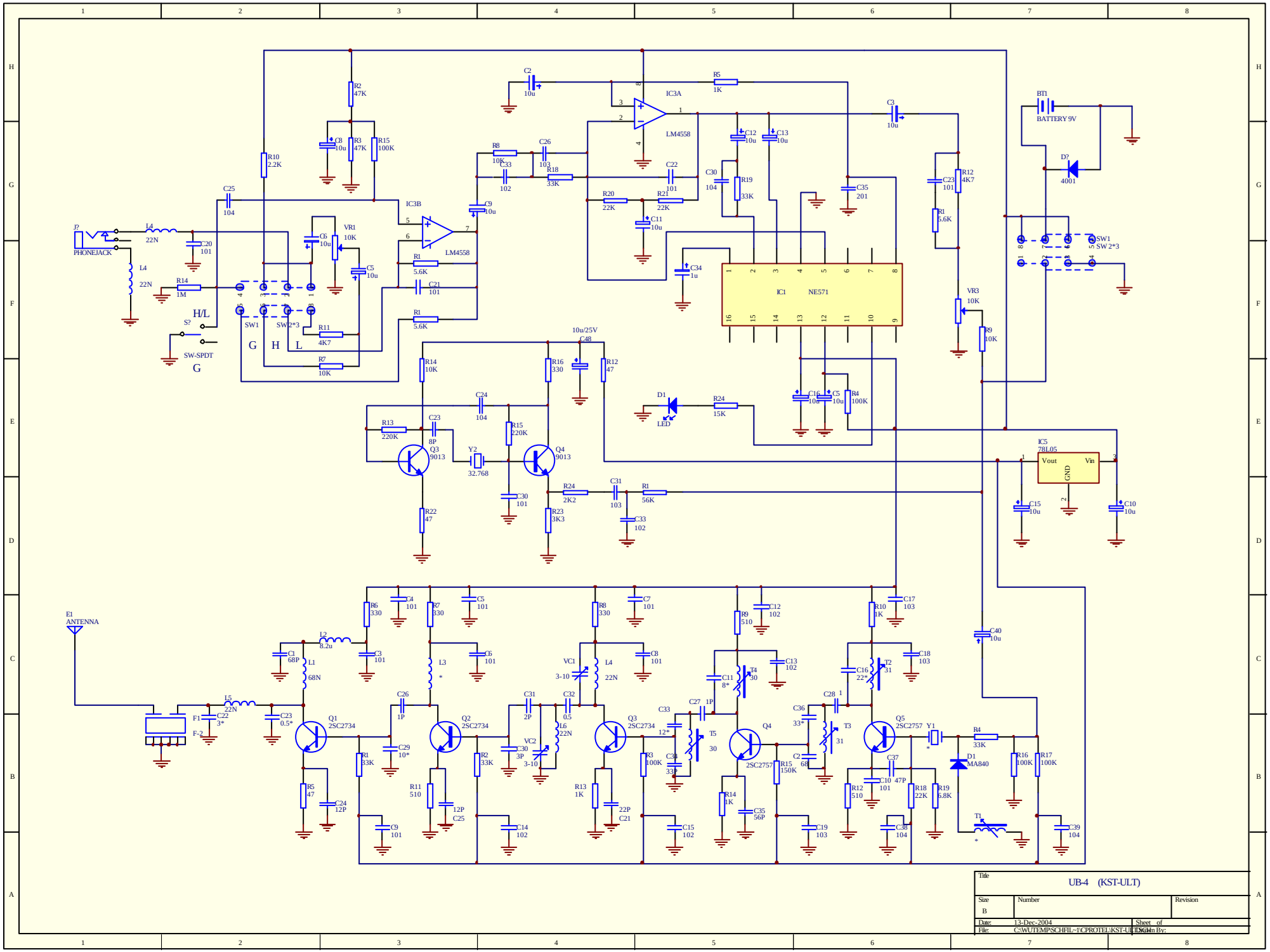

Title		
UB-4 (KST-ULT)		
Size: B	Number	Revision
Date: 13-Dec-2004	Sheet of	
File: C:\WUTEMP\SCHFIL~1\CPROTEL\KST-ULT.SCH	Drawn By:	