Schematic Diagram

FCC ID : BEJX126XF

Model No.: MX-126MG

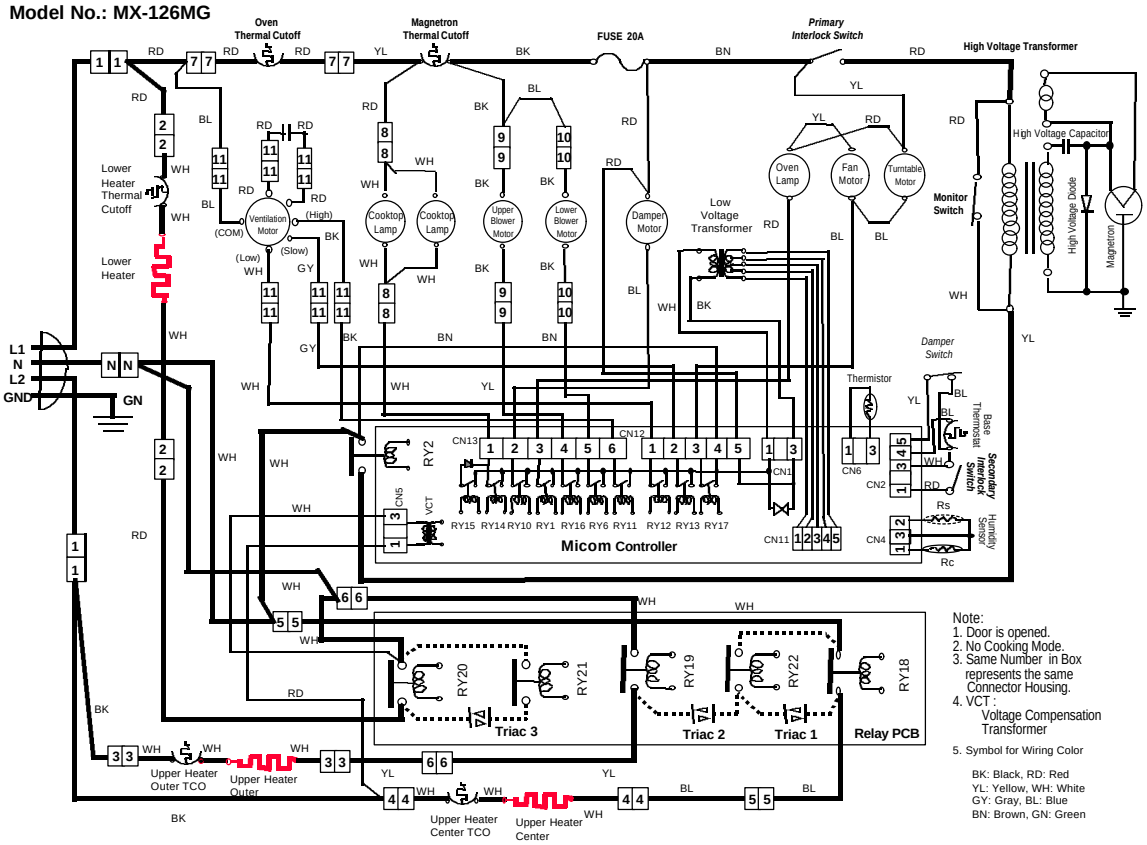

Note:
1. Door is opened.
2. No Cooking Mode.
3. Same Number in Box represents the same Connector Housing.
4. VCT : Voltage Compensation Transformer
5. Symbol for Wiring Color

BK: Black, RD: Red
YL: Yellow, WH: White
GY: Gray, BL: Blue
BN: Brown, GN: Green