ALLEN TELECOM
TELIA

CONFIDENTIEL

TLB0184 Rev B

(Feedforward Amplifier 30W 1930-1990 MHz 26dB gain)

SCHEMATICS AND PARTS LIST

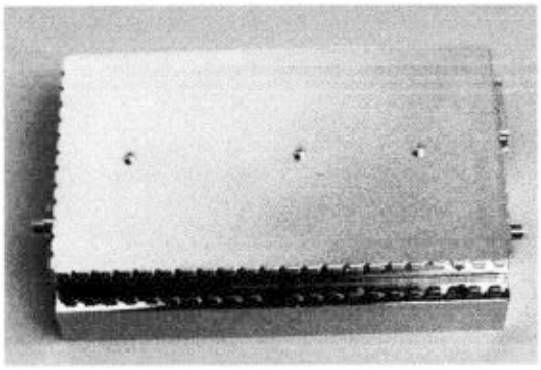

DOC n° : 99SL001	Date issued : jan 99
Revision :	Date revised :

TELIA S.A. 46, allée de Megevie - 33174 GRADIGNAN
Tél. (5) 56 89 56 19 - Fax. (5) 56 89 53 44
S.A. au capital de 1 000 000 francs - R.C.S. Bordeaux B 380 341 685 - APE 322 A
N° TVA Intracommunautaire FR 02 380 341 685

LISTE DES COMPOSANTS TLA0220A

Repère	Désignation	Boitier	TELIACODE	FABRICANT 1	REF FABRICANT 1	FABRICANT 2	REF FABRICANT 2	Observations
C42	1nF-50V	CAPA0603	CCS1102K1	AVX	06035C102KAT2A	PHILIPS	06032R102K9BB00	
C43	1nF-50V	CAPA0603	CCS1102K1	AVX	06035C102KAT2A	PHILIPS	06032R102K9BB00	
C44	1nF-50V	CAPA0603	CCS1102K1	AVX	06035C102KAT2A	PHILIPS	06032R102K9BB00	
C45	1nF-50V	CAPA0603	CCS1102K1	AVX	06035C102KAT2A	PHILIPS	06032R102K9BB00	
C46	1nF-50V	CAPA0805	CCS2102J1	VITRAMON	VJ0805A102JXATM	SIEMENS	B37940K5102J62	
C47	1nF-50V	CAPA0603	CCS1102K1	AVX	06035C102KAT2A	PHILIPS	06032R102K9BB00	
C48	1nF-50V	CAPA0603	CCS1102K1	AVX	06035C102KAT2A	PHILIPS	06032R102K9BB00	
C49	1nF-50V	CAPA0603	CCS1102K1	AVX	06035C102KAT2A	PHILIPS	06032R102K9BB00	
C50	1nF-50V	CAPA0603	CCS1102K1	AVX	06035C102KAT2A	PHILIPS	06032R102K9BB00	
C51	1nF-50V	CAPA0603	CCS1102K1	AVX	06035C102KAT2A	PHILIPS	06032R102K9BB00	
C52	1nF-50V	CAPA0603	CCS1102K1	AVX	06035C102KAT2A	PHILIPS	06032R102K9BB00	
C53	1nF-50V	CAPA0603	CCS1102K1	AVX	06035C102KAT2A	PHILIPS	06032R102K9BB00	
C54	1nF-50V	CAPA0603	CCS1102K1	AVX	06035C102KAT2A	PHILIPS	06032R102K9BB00	
C55	1nF-50V	CAPA0603	CCS1102K1	AVX	06035C102KAT2A	PHILIPS	06032R102K9BB00	
C56	1nF-50V	CAPA0603	CCS1102K1	AVX	06035C102KAT2A	PHILIPS	06032R102K9BB00	
C57	1pF-50V	CAPA0603	CCS11R0J1	PHILIPS	0603CG010J9BB			
C58	1nF-50V	CAPA0603	CCS1102K1	AVX	06035C102KAT2A	PHILIPS	06032R102K9BB00	
C59	1nF-50V	CAPA0603	CCS1102K1	AVX	06035C102KAT2A	PHILIPS	06032R102K9BB00	
C60	1nF-50V	CAPA0603	CCS1102K1	AVX	06035C102KAT2A	PHILIPS	06032R102K9BB00	
C61	1nF-50V	CAPA0603	CCS1102K1	AVX	06035C102KAT2A	PHILIPS	06032R102K9BB00	
C62	0.1µF-63V	CAPA1206	CCS3104M1	VITRAMON	VJ1206Y104MXAT	PHILIPS	12062R104K9BB0D	
C63	10µF-16V	293D SIZE C	CTC106161	SPRAGUE	293D 106 X9 016 C2T	KEMET	T491C106K016AS	
C64	10nF-50V	CAPA0805	CCS2103M1	VITRAMON	VJ0805Y103KXAT	AVX	08055C103KAT2A	
C65	1pF-50V	CAPA0603	CCS11R0J1	PHILIPS	0603CG010J9BB			
C66	1pF-50V	CAPA0603	CCS11R0J1	PHILIPS	0603CG010J9BB			
C67	1nF-50V	CAPA0603	CCS1102K1	AVX	06035C102KAT2A	PHILIPS	06032R102K9BB00	
C68	1nF-50V	CAPA0603	CCS1102K1	AVX	06035C102KAT2A	PHILIPS	06032R102K9BB00	
C69	1µF-16V	CAPA1206	CCS3105K1	TDK	C3216X7R1C105KT	PHILIPS	12062R105K7BB	
C70	1nF-50V	CAPA0603	CCS1102K1	AVX	06035C102KAT2A	PHILIPS	06032R102K9BB00	
C71	33µF-25V	293D SIZE E	CTXE336F1	AVX	TPSE336K025R0300			
C72	33µF-25V	293D SIZE E	CTXE336F1	AVX	TPSE336K025R0300			
C73	10nF-50V	CAPA0805	CCS2103M1	VITRAMON	VJ0805Y103KXAT	AVX	08055C103KAT2A	
C74	0.1µF-63V	CAPA1206	CCS3104M1	VITRAMON	VJ1206Y104MXAT	PHILIPS	12062R104K9BB0D	
C75	10µF-16V	293D SIZE C	CTC106161	SPRAGUE	293D 106 X9 016 C2T	KEMET	T491C106K016AS	
C76	1µF-35V	293D SIZE B	CTB105351	KEMET	T491B105K035ASTR	SPRAGUE	293D 105 X9 035 B2T	
C77	10nF-50V	CAPA0805	CCS2103M1	VITRAMON	VJ0805Y103KXAT	AVX	08055C103KAT2A	
C78	10nF-50V	CAPA0805	CCS2103M1	VITRAMON	VJ0805Y103KXAT	AVX	08055C103KAT2A	
C79	22µF-35V	293D SIZE E	CTXE226G1	KEMET	T495X226K035AS			
C80	0.1µF-63V	CAPA1206	CCS3104M1	VITRAMON	VJ1206Y104MXAT	PHILIPS	12062R104K9BB0D	
C81	10nF-50V	CAPA0805	CCS2103M1	VITRAMON	VJ0805Y103KXAT	AVX	08055C103KAT2A	
C82	10nF-50V	CAPA0805	CCS2103M1	VITRAMON	VJ0805Y103KXAT	AVX	08055C103KAT2A	

TLB0184 Rev B SCHEMATICS AND PARTS LIST

ASSEMBLY LEVEL 2	ASSEMBLY LEVEL 1	DESIGNATION	DOCUMENT	TYPE	PAGE
TLB0184 Rev B		AMPLI FF 30W 1930-1990 MHz 26dB GAIN	99SC003	SCHEMATIC PARTS LIST	1 2
	TLA0220 Rev A	CONTROL	98SC036A	SCHEMATIC PARTS LIST	5 7
	TLA0205 Rev A	ERROR	98SC021B	SCHEMATIC PARTS LIST	15 16
	TLA0216 Rev B	MAIN	98SCO032B	SCHEMATIC PARTS LIST	19 20
	TLA0239	L.A.R.	98SCO032B	SCHEMATIC PARTS LIST	19 24
	TLA0208 Rev A	DC TO DC CONVERTER	98SC023A	SCHEMATIC PARTS LIST	25 26

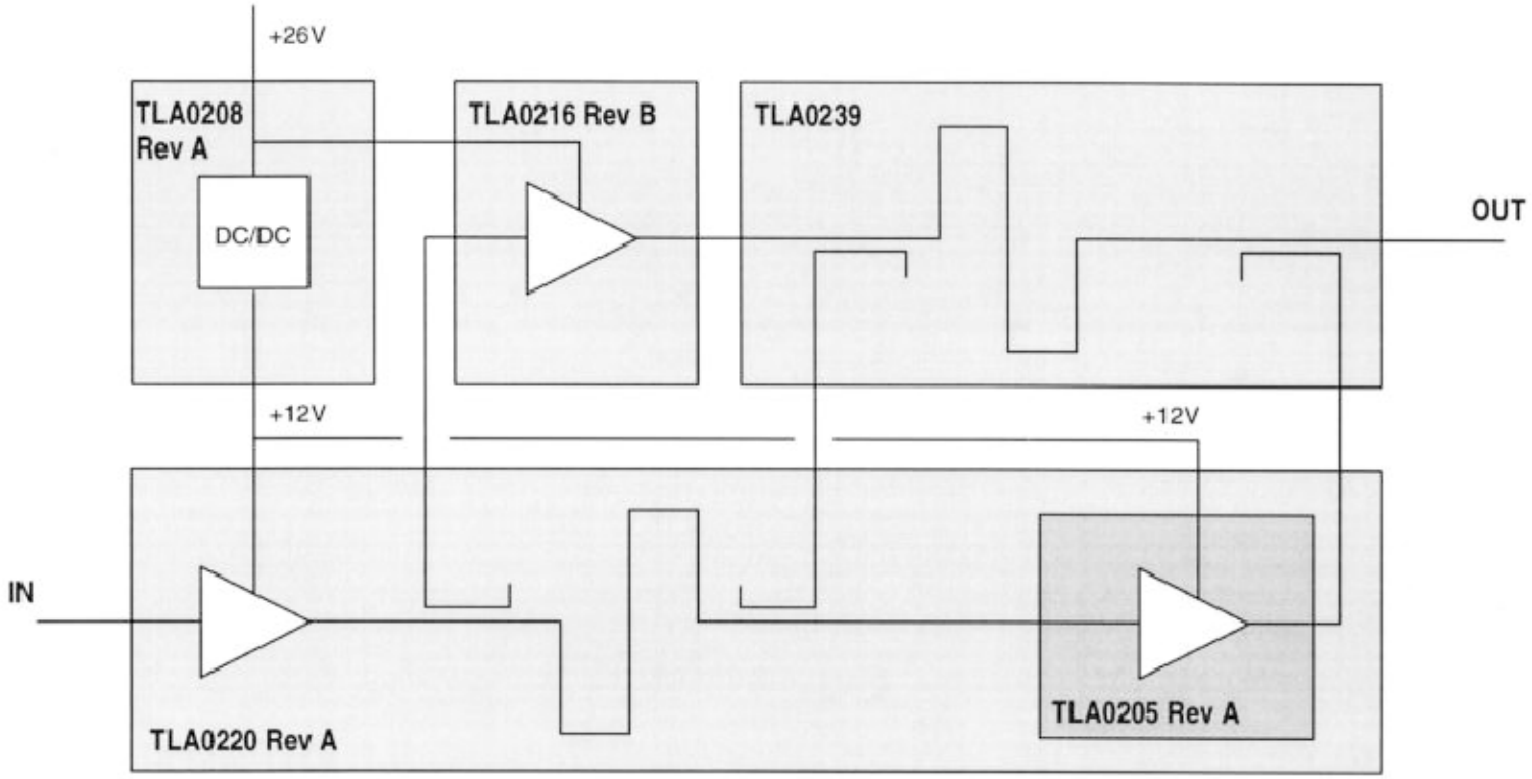

Révision :			
Echelle :	Mat.	Dess. M QUEBRE	Date : 26/01/99
TLB0184 Rev B :		Approuvé :	
AMPLI FF 30W 1930-1990MHz 26dB gain		Fich. : 99SC003.DRW	
TELIA S.A. 46 allée de Megevie 33174 GRADIGNAN CEDEX		Dess. : 99SC003	Page 1/1

TELIA S.A.

LISTE DES COMPOSANTS TLB0184B

Repère	Désignation	Boitier	TELIACODE	FABRICANT 1	REF FABRICANT 1	FABRICANT 2	REF FABRICANT 2	Observations
CN1	SMA 4 trous	EMBASE	KRFSMA001	RADIALL	R 125 410 001			
CN2	SMA FEM 2 TROUS	EMBASE (+pin+téfl 5mm)	KCNF01003	IMS	2276.42.2017.195			
CN3	SUB D 15PTS MALE FILT	CONNECTEUR	KSM150002	FERROPERM	15MB102Z500P	FCT	FC 15P5K120	
CN4	pour embase RF	Pins Universelles	KXX000003	SOCAPEX	SX 61B 2607			
DV1	RPM07	EMBALLAGE	ZUCRPM071	RAJA	RPM07			
DV2	Ø 6mm L=4.8mm	CAPUCHON	ADA060481	MOPAC	A6.0S4.8R VINYLE 9238			
DV3	Ø 6mm L=4.8mm	CAPUCHON	ADA060481	MOPAC	A6.0S4.8R VINYLE 9238			
ET	50.8x25.4 PREIMPRIMEE	ETIQUETTE	ESA050251	CABLOG	CAB42-508254			
HW01	Hex. M/F M3/US L=6	ENTRETOISE SUB D	VANH03061	HARTING	09670009974	09670009974	09670009974	
HW02	Hex. M/F M3/US L=6	ENTRETOISE SUB D	VANH03061	HARTING	09670009974	09670009974	09670009974	
HW03	INOX TC 2.5x6 PZ	VIS	VVIC25062		TC M 2.5X6 INOX PZ		TC M2.5X6 INOX PZ	
HW04	INOX TC 2.5x6 PZ	VIS	VVIC25062		TC M 2.5X6 INOX PZ		TC M2.5X6 INOX PZ	
HW05	INOX TC 2.5x6 PZ	VIS	VVIC25062		TC M 2.5X6 INOX PZ		TC M2.5X6 INOX PZ	
HW06	INOX TC 2.5x6 PZ	VIS	VVIC25062		TC M 2.5X6 INOX PZ		TC M2.5X6 INOX PZ	
HW07	INOX TC 2.5x6 PZ	VIS	VVIC25062		TC M 2.5X6 INOX PZ		TC M2.5X6 INOX PZ	
HW08	INOX 2.5mm	GROWER	VRIG25051		Rondelle Grower M2.5 X 5 INOX		delle Grower M2.5 X 5 I	
HW09	INOX 2.5mm	GROWER	VRIG25051		Rondelle Grower M2.5 X 5 INOX		delle Grower M2.5 X 5 I	
HW10	INOX TC 2.5x6 PZ	VIS	VVIC25062		TC M 2.5X6 INOX PZ		TC M2.5X6 INOX PZ	
HW11	INOX TC 2.5x6 PZ	VIS	VVIC25062		TC M 2.5X6 INOX PZ		TC M2.5X6 INOX PZ	
HW12	INOX 2.5mm	GROWER	VRIG25051		Rondelle Grower M2.5 X 5 INOX		delle Grower M2.5 X 5 I	
HW13	INOX 2.5mm	GROWER	VRIG25051		Rondelle Grower M2.5 X 5 INOX		delle Grower M2.5 X 5 I	
HW14	INOX TC 2.5x8 PZ	VIS	VVIC25082		TC M 2.5X8 INOX PZ		7985 TC M2.5X8 INOX	
HW15	INOX TC 2.5x8 PZ	VIS	VVIC25082		TC M 2.5X8 INOX PZ		7985 TC M2.5X8 INOX	
HW16	INOX 2.5mm	GROWER	VRIG25051		Rondelle Grower M2.5 X 5 INOX		delle Grower M2.5 X 5 I	
HW17	INOX 2.5mm	GROWER	VRIG25051		Rondelle Grower M2.5 X 5 INOX		delle Grower M2.5 X 5 I	
HW18	INOX 2.5mm	GROWER	VRIG25051		Rondelle Grower M2.5 X 5 INOX		delle Grower M2.5 X 5 I	
HW19	INOX 2.5mm	GROWER	VRIG25051		Rondelle Grower M2.5 X 5 INOX		delle Grower M2.5 X 5 I	
HW20	INOX TC 2.5x6 PZ	VIS	VVIC25062		TC M 2.5X6 INOX PZ		TC M2.5X6 INOX PZ	
HW21	INOX TC 2.5x6 PZ	VIS	VVIC25062		TC M 2.5X6 INOX PZ		TC M2.5X6 INOX PZ	
HW22	INOX TC 2.5x6 PZ	VIS	VVIC25062		TC M 2.5X6 INOX PZ		TC M2.5X6 INOX PZ	
HW23	INOX TC 2.5x6 PZ	VIS	VVIC25062		TC M 2.5X6 INOX PZ		TC M2.5X6 INOX PZ	
HW24	INOX TC 2x8 PZ	VIS	VVCI02082		TC M2 X 8 INOX PZ			
HW25	INOX TC 2x8 PZ	VIS	VVCI02082		TC M2 X 8 INOX PZ			
HW26	INOX TC 2x8 PZ	VIS	VVCI02082		TC M2 X 8 INOX PZ			
HW27	INOX TC 2x8 PZ	VIS	VVCI02082		TC M2 X 8 INOX PZ			
HW28	INOX TC 2x8 PZ	VIS	VVCI02082		TC M2 X 8 INOX PZ			
HW29	INOX TC 2x8 PZ	VIS	VVCI02082		TC M2 X 8 INOX PZ			
HW30	INOX TC 2x8 PZ	VIS	VVCI02082		TC M2 X 8 INOX PZ			
HW31	INOX TC 2x8 PZ	VIS	VVCI02082		TC M2 X 8 INOX PZ			
HW32	INOX TC 2x8 PZ	VIS	VVCI02082		TC M2 X 8 INOX PZ			
HW33	INOX TC 2x8 PZ	VIS	VVCI02082		TC M2 X 8 INOX PZ			

TELIA S.A.

LISTE DES COMPOSANTS TLB0184B

Repère	Désignation	Boitier	TELIACODE	FABRICANT 1	REF FABRICANT 1	FABRICANT 2	REF FABRICANT 2	Observations
HW34	INOX TC 2x8 PZ	VIS	VVCI020B2		TC M2 X 8 INOX PZ			
HW35	INOX TC 2x8 PZ	VIS	VVCI020B2		TC M2 X 8 INOX PZ			
HW36	INOX TC 2x8 PZ	VIS	VVCI020B2		TC M2 X 8 INOX PZ			
HW37	INOX 2mm	GROWER	VRIG02041		Rondelle Grower M2 X 4 INOX		ndelle Grower M2 X 4 IN	
HW38	INOX 2mm	GROWER	VRIG02041		Rondelle Grower M2 X 4 INOX		ndelle Grower M2 X 4 IN	
HW39	INOX 2mm	GROWER	VRIG02041		Rondelle Grower M2 X 4 INOX		ndelle Grower M2 X 4 IN	
HW40	INOX 2mm	GROWER	VRIG02041		Rondelle Grower M2 X 4 INOX		ndelle Grower M2 X 4 IN	
HW41	INOX 2mm	GROWER	VRIG02041		Rondelle Grower M2 X 4 INOX		ndelle Grower M2 X 4 IN	
HW42	INOX 2mm	GROWER	VRIG02041		Rondelle Grower M2 X 4 INOX		ndelle Grower M2 X 4 IN	
HW43	INOX 2mm	GROWER	VRIG02041		Rondelle Grower M2 X 4 INOX		ndelle Grower M2 X 4 IN	
HW44	INOX 2mm	GROWER	VRIG02041		Rondelle Grower M2 X 4 INOX		ndelle Grower M2 X 4 IN	
HW45	INOX 2mm	GROWER	VRIG02041		Rondelle Grower M2 X 4 INOX		ndelle Grower M2 X 4 IN	
HW46	INOX 2mm	GROWER	VRIG02041		Rondelle Grower M2 X 4 INOX		ndelle Grower M2 X 4 IN	
HW47	INOX 2mm	GROWER	VRIG02041		Rondelle Grower M2 X 4 INOX		ndelle Grower M2 X 4 IN	
HW48	INOX 2mm	GROWER	VRIG02041		Rondelle Grower M2 X 4 INOX		ndelle Grower M2 X 4 IN	
HW49	INOX 2mm	GROWER	VRIG02041		Rondelle Grower M2 X 4 INOX		ndelle Grower M2 X 4 IN	
HW50	METALLIQUE M2.5	INSERT	VIIC2505-1	VERO ELECTRONIC	174-229770 G + étamage			
HW51	METALLIQUE M2.5	INSERT	VIIC2505-1	VERO ELECTRONIC	174-229770 G + étamage			
ME01	97ME067F	BOITIER RP9	MTU97067F	ADMI	97ME067F	C3D	97ME067F	
ME02	97ME124	COUVERCLE N°1 RP9	MTE971240	DEMSO	97ME124			
ME03	97ME125	COUVERCLE N°2 RP9	MTE971250	DEMSO	97ME125			
ME04	97ME118 L=5mm	TRAV. TEFLON EP. 50oh	MDD971180	IDMM INDUSTRIE	97ME118			
ME05	98ME066 L=10.7mm	TRAVERSEE TEFLON EP	MDD980660	IDMM INDUSTRIE	98ME066			
ME06	98ME066 L=10.7mm	TRAVERSEE TEFLON EP	MDD980660	IDMM INDUSTRIE	98ME066			
ME07	98ME067 L=9.6mm	TRAVERSEE TEFLON EP	MDD980670	IDMM INDUSTRIE	98ME067			
ME08	98ME067 L=9.6mm	TRAVERSEE TEFLON EP	MDD980670	IDMM INDUSTRIE	98ME067			
ME09	98ME067 L=9.6mm	TRAVERSEE TEFLON EP	MDD980670	IDMM INDUSTRIE	98ME067			
ME10	98ME067 L=9.6mm	TRAVERSEE TEFLON EP	MDD980670	IDMM INDUSTRIE	98ME067			
ME11	98ME067 L=9.6mm	TRAVERSEE TEFLON EP	MDD980670	IDMM INDUSTRIE	98ME067			
ME12	98ME067 L=9.6mm	TRAVERSEE TEFLON EP	MDD980670	IDMM INDUSTRIE	98ME067			
ME13	98ME068 L=9.6mm	TRAVERSEE TEFLON	MDD980680	IDMM INDUSTRIE	98ME068			
ME14	98ME068 L=9.6mm	TRAVERSEE TEFLON	MDD980680	IDMM INDUSTRIE	98ME068			
ME15	98ME069 L=28mm	AME POUR TRAVERSEE	MDD980690	IDMM INDUSTRIE	98ME069			
ME16	98ME069 L=28mm	AME POUR TRAVERSEE	MDD980690	IDMM INDUSTRIE	98ME069			
ME17	98ME069 L=28mm	AME POUR TRAVERSEE	MDD980690	IDMM INDUSTRIE	98ME069			
ME18	98ME069 L=28mm	AME POUR TRAVERSEE	MDD980690	IDMM INDUSTRIE	98ME069			
ME19	98ME069 L=28mm	AME POUR TRAVERSEE	MDD980690	IDMM INDUSTRIE	98ME069			
ME20	98ME069 L=28mm	AME POUR TRAVERSEE	MDD980690	IDMM INDUSTRIE	98ME069			
ME21	98ME069 L=28mm	AME POUR TRAVERSEE	MDD980690	IDMM INDUSTRIE	98ME069			
ME22	98ME069 L=28mm	AME POUR TRAVERSEE	MDD980690	IDMM INDUSTRIE	98ME069			
ME23	98ME069 L=28mm	AME POUR TRAVERSEE	MDD980690	IDMM INDUSTRIE	98ME069			

TELIA S.A.

LISTE DES COMPOSANTS TLB0184B

Repère	Désignation	Boitier	TELIACODE	FABRICANT 1	REF FABRICANT 1	FABRICANT 2	REF FABRICANT 2	Observations
ME24	98ME069 L=28mm	AME POUR TRAVERSEE	MD:D980690	IDMM INDUSTRIE	98ME069			
ME25	98ME069 L=28mm	AME POUR TRAVERSEE	MD:D980690	IDMM INDUSTRIE	98ME069			
ME26	98ME069 L=28mm	AME POUR TRAVERSEE	MD:D980690	IDMM INDUSTRIE	98ME069			
ME27	96ME102-4	PASTILLE TEFLON	MD:D961024	IDMM	96ME102-4			
ME28	96ME102-4	PASTILLE TEFLON	MD:D961024	IDMM	96ME102-4			
ME29	96ME102-4	PASTILLE TEFLON	MD:D961024	IDMM	96ME102-4			
ME30	96ME102-4	PASTILLE TEFLON	MD:D961024	IDMM	96ME102-4			
ME31	96ME102-4	PASTILLE TEFLON	MD:D961024	IDMM	96ME102-4			
ME32	96ME102-4	PASTILLE TEFLON	MD:D961024	IDMM	96ME102-4			
ME33	96ME102-4	PASTILLE TEFLON	MD:D961024	IDMM	96ME102-4			
ME34	96ME102-4	PASTILLE TEFLON	MD:D961024	IDMM	96ME102-4			
ST1	STRAP							
ST2	STRAP							
ST3	STRAP							
ST4	STRAP							
ST5	STRAP							
TL1	CONTROLE	CIRCUIT	TLA0220RA	TELIA	TLA0220A			
TL2	MAIN	CIRCUIT	TLA0216RB	TELIA	TLA0216B			
TL3	L.A.R.	CIRCUIT	TLA0239R0	TELIA	TLA0239			
TL4	DEVOLTEUR	CIRCUIT	TLA0208RA	TELIA	TLA0208A			
TL5	ERREUR	CIRCUIT	TLA0205RA	TELIA	TLA0205A			

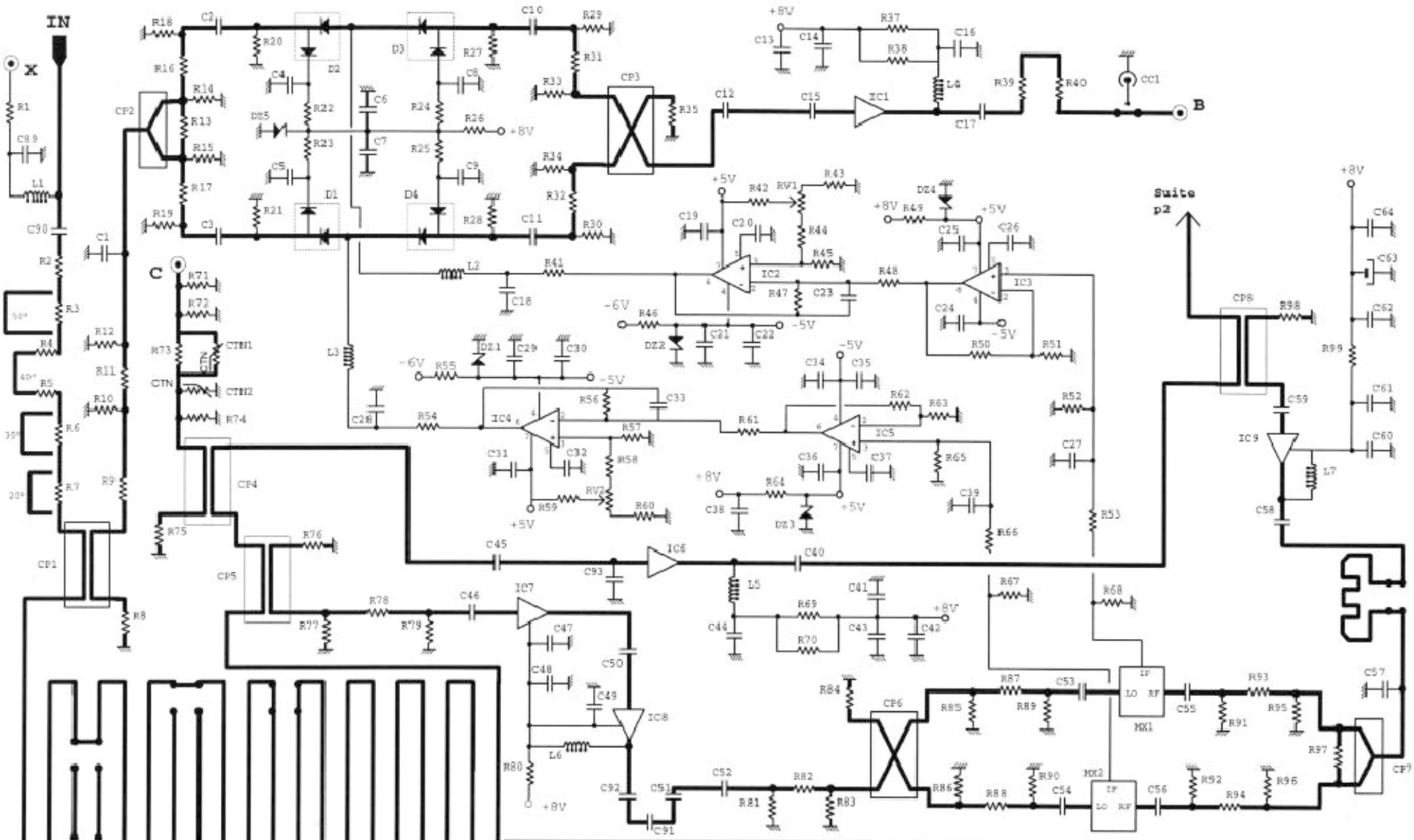

Révision : A			Date : 10/12/98
Echelle :	Mat.	Dess. M QUEBRE	Date : 13/10/98
TLA0220A : CIRCUIT CONTROLE 1900MHz 26dB		Approuvé:	
		Fich.: 98SC036A.DRW	
TELIA S.A. 46 allée de Megevie 33174 GRADIGNAN CEDEX		Dess.: 98SC036A	Page 1/2

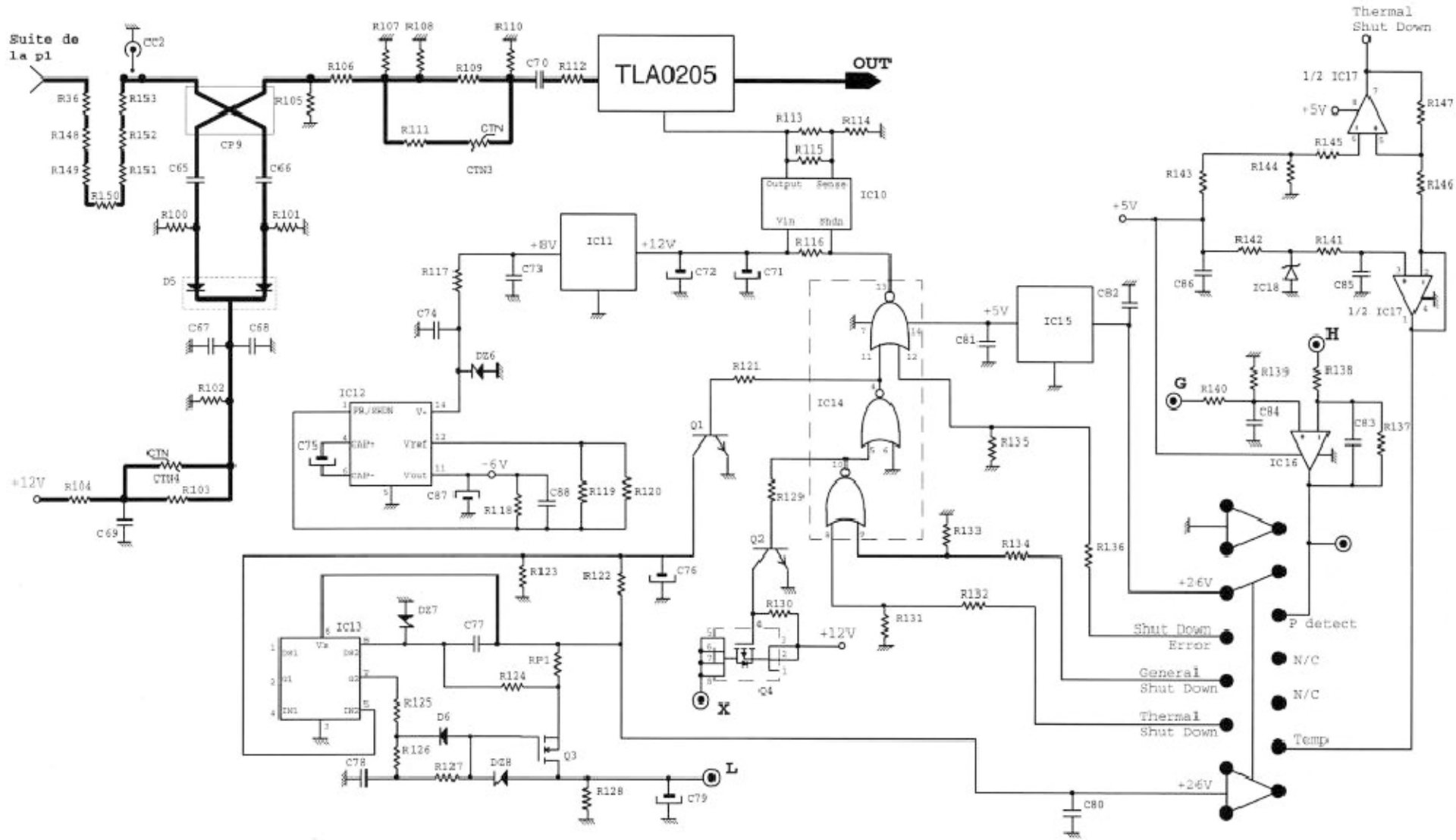

CONFIDENTIEL

Révision : A				Date : 10/12/98
Echelle :		Mat.	Dess. M QUEBRE	Date : 13/10/98
TLA0220A : CIRCUIT CONTROLE 1900MHz 26dB			Approuvé :	
			Fich.: 98SC036A.DRW	
TELIA S.A. 46 allée de Megevie 33174 GRADIGNAN CEDEX			Dess.: 98SC036A	Page 2/2

LISTE DES COMPOSANTS TLA0220A

Repère	Désignation	Boîtier	TELIACODE	FABRICANT 1	REF FABRICANT 1	FABRICANT 2	REF FABRICANT 2	Observations
C01	1pF-50V	CAPA0603	CCS11R0J1	PHILIPS	0603CG010J9BB			
C02	68pF-50V	CAPA0603	CCS1680J1	AVX	06035A680JAT2A	PHILIPS		
C03	68pF-50V	CAPA0603	CCS1680J1	AVX	06035A680JAT2A	PHILIPS		
C04	68pF-50V	CAPA0603	CCS1680J1	AVX	06035A680JAT2A	PHILIPS		
C05	68pF-50V	CAPA0603	CCS1680J1	AVX	06035A680JAT2A	PHILIPS		
C06	1nF-50V	CAPA0603	CCS1102K1	AVX	06035C102KAT2A	PHILIPS	06032R102K9BB00	
C07	1nF-50V	CAPA0603	CCS1102K1	AVX	06035C102KAT2A	PHILIPS	06032R102K9BB00	
C08	68pF-50V	CAPA0603	CCS1680J1	AVX	06035A680JAT2A	PHILIPS		
C09	68pF-50V	CAPA0603	CCS1680J1	AVX	06035A680JAT2A	PHILIPS		
C10	68pF-50V	CAPA0603	CCS1680J1	AVX	06035A680JAT2A	PHILIPS		
C11	68pF-50V	CAPA0603	CCS1680J1	AVX	06035A680JAT2A	PHILIPS		
C12	1nF-50V	CAPA0603	CCS1102K1	AVX	06035C102KAT2A	PHILIPS	06032R102K9BB00	
C13	1nF-50V	CAPA0603	CCS1102K1	AVX	06035C102KAT2A	PHILIPS	06032R102K9BB00	
C14	0.1µF-63V	CAPA1206	CCS3104M1	VITRAMON	VJ1206Y104MXAT	PHILIPS	12062R104K9BB0D	
C15	1nF-50V	CAPA0603	CCS1102K1	AVX	06035C102KAT2A	PHILIPS	06032R102K9BB00	
C16	1nF-50V	CAPA0603	CCS1102K1	AVX	06035C102KAT2A	PHILIPS	06032R102K9BB00	
C17	1nF-50V	CAPA0603	CCS1102K1	AVX	06035C102KAT2A	PHILIPS	06032R102K9BB00	
C18	68pF-50V	CAPA0603	CCS1680J1	AVX	06035A680JAT2A	PHILIPS		
C19	10nF-50V	CAPA0805	CCS2103M1	VITRAMON	VJ0805Y103KXAT	AVX	08055C103KAT2A	
C20	22pF-50V	CAPA0603	CCS1220J1	AVX-KYOCERA	06035A220JAT00J		06035A220JAT2A	
C21	10nF-50V	CAPA0805	CCS2103M1	VITRAMON	VJ0805Y103KXAT	AVX	08055C103KAT2A	
C22	1nF-50V	CAPA0603	CCS1102K1	AVX	06035C102KAT2A	PHILIPS	06032R102K9BB00	
C23	2.2nF-50V	CAPA0603	CCS1222K1	Philips	06032R222K9BB			
C24	1nF-50V	CAPA0603	CCS1102K1	AVX	06035C102KAT2A	PHILIPS	06032R102K9BB00	
C25	1nF-50V	CAPA0603	CCS1102K1	AVX	06035C102KAT2A	PHILIPS	06032R102K9BB00	
C26	10pF-50V	CAPA0603	CCS1100J1	PHILIPS	0603CG100J9BB			
C27	22pF-50V	CAPA0603	CCS1220J1	AVX-KYOCERA	06035A220JAT00J		06035A220JAT2A	
C28	68pF-50V	CAPA0603	CCS1680J1	AVX	06035A680JAT2A	PHILIPS		
C29	10nF-50V	CAPA0805	CCS2103M1	VITRAMON	VJ0805Y103KXAT	AVX	08055C103KAT2A	
C30	1nF-50V	CAPA0603	CCS1102K1	AVX	06035C102KAT2A	PHILIPS	06032R102K9BB00	
C31	10nF-50V	CAPA0805	CCS2103M1	VITRAMON	VJ0805Y103KXAT	AVX	08055C103KAT2A	
C32	22pF-50V	CAPA0603	CCS1220J1	AVX-KYOCERA	06035A220JAT00J		06035A220JAT2A	
C33	2.2nF-50V	CAPA0603	CCS1222K1	Philips	06032R222K9BB			
C34	10nF-50V	CAPA0805	CCS2103M1	VITRAMON	VJ0805Y103KXAT	AVX	08055C103KAT2A	
C35	1nF-50V	CAPA0603	CCS1102K1	AVX	06035C102KAT2A	PHILIPS	06032R102K9BB00	
C36	1nF-50V	CAPA0603	CCS1102K1	AVX	06035C102KAT2A	PHILIPS	06032R102K9BB00	
C37	10pF-50V	CAPA0603	CCS1100J1	PHILIPS	0603CG100J9BB			
C38	10nF-50V	CAPA0805	CCS2103M1	VITRAMON	VJ0805Y103KXAT	AVX	08055C103KAT2A	
C39	22pF-50V	CAPA0603	CCS1220J1	AVX-KYOCERA	06035A220JAT00J		06035A220JAT2A	
C40	1nF-50V	CAPA0603	CCS1102K1	AVX	06035C102KAT2A	PHILIPS	06032R102K9BB00	
C41	1nF-50V	CAPA0603	CCS1102K1	AVX	06035C102KAT2A	PHILIPS	06032R102K9BB00	