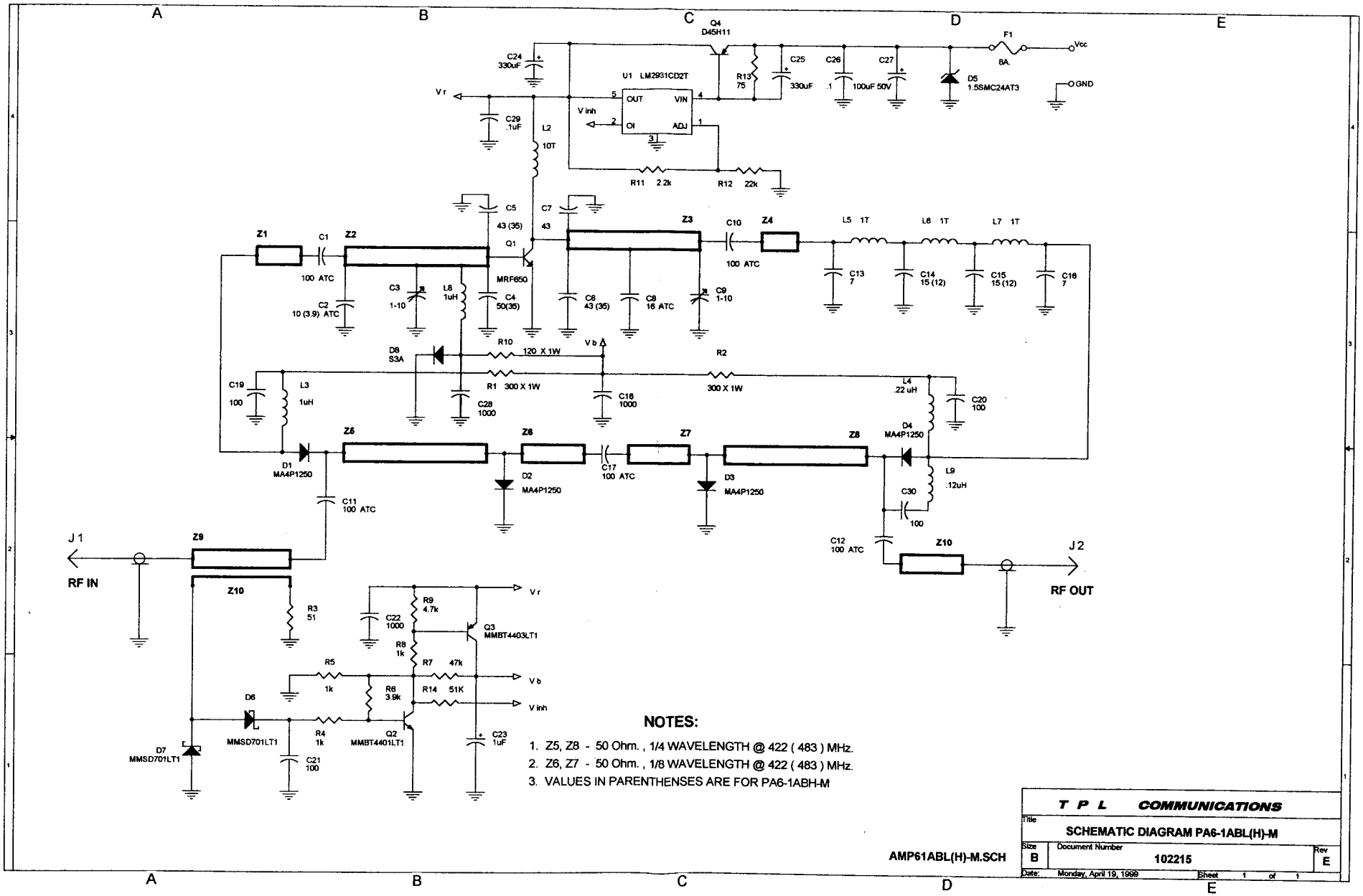

NOTES:

1. Z5, Z8 - 50 Ohm. , 1/4 WAVELENGTH @ 422 (483) MHz.
2. Z6, Z7 - 50 Ohm. , 1/8 WAVELENGTH @ 422 (483) MHz.
3. VALUES IN PARENTHENSES ARE FOR PA6-1ABH-M

AMP61ABL(H)-M.SCH

T P L COMMUNICATIONS		
Title: SCHEMATIC DIAGRAM PA6-1ABL(H)-M		
Size: B	Document Number: 102215	Rev: E
Date: Monday, April 19, 1999	Sheet 1 of 1	