REVISIONS				
EN	REV	DESCRIPTION	DATE	APPROVAL
35770	–	SEE SHEET 1		
35804	A	SEE SHEET 1	09/26/05	RUSSO

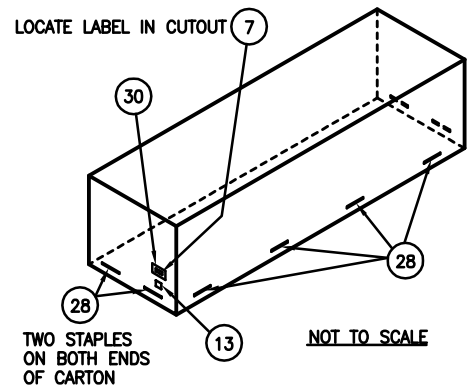

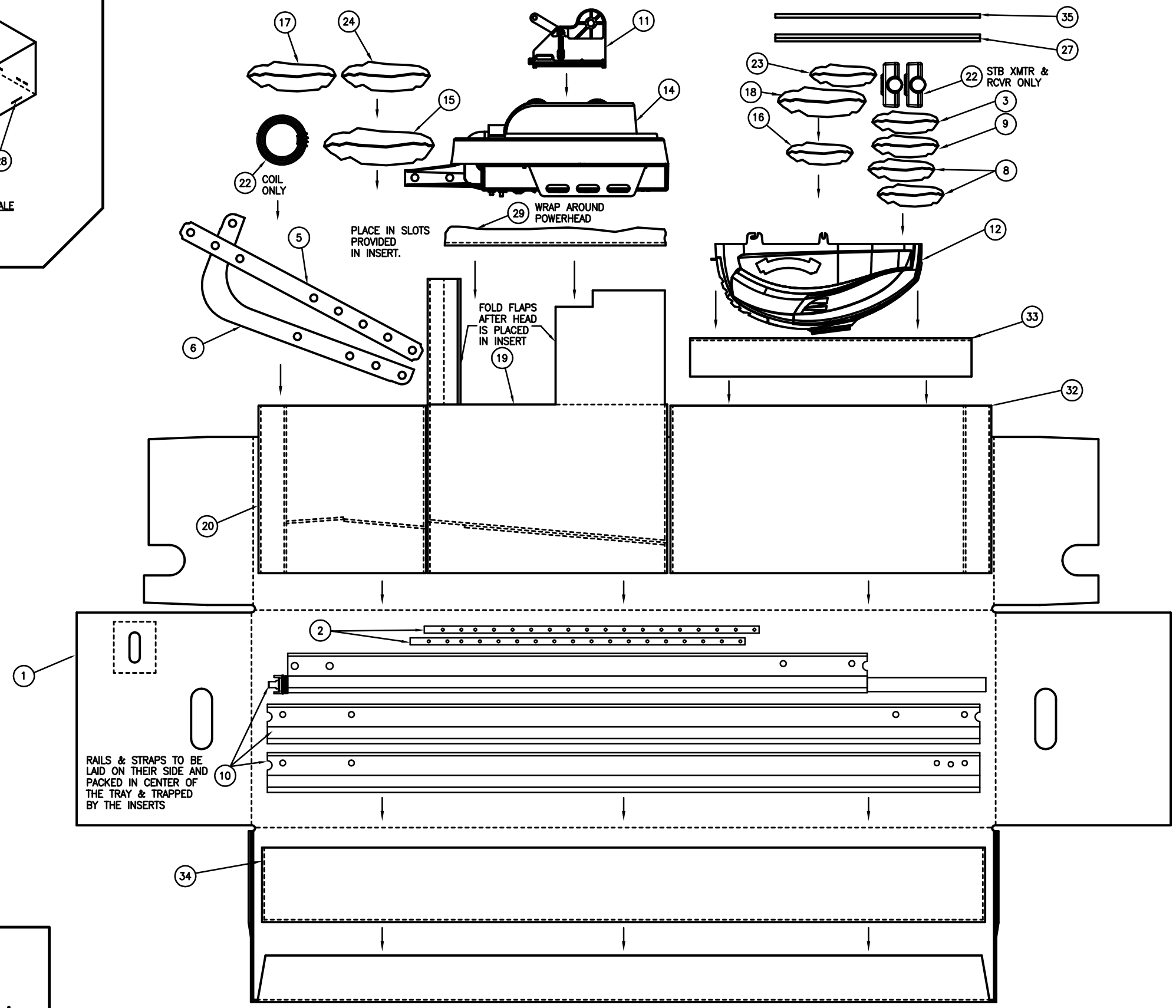

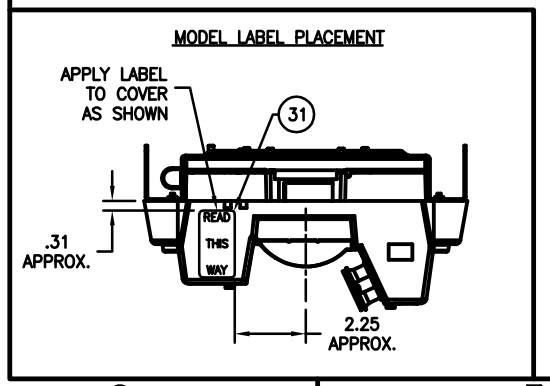

Plotted 09-23-05 14:00

THE DRAWINGS AND ALL OTHER INFORMATION CONTAINED HEREIN ARE THE CONFIDENTIAL AND PROPRIETARY PROPERTY OF OVERHEAD DOOR CORPORATION AND ITS AFFILIATED COMPANIES. THIS DRAWING AND INFORMATION, IN WHOLE OR IN PART, MAY NOT BE COPIED IN ANY MANNER OR DISCLOSED TO ANYONE WITHOUT THE PRIOR WRITTEN CONSENT OF OVERHEAD DOOR CORPORATION. NO DISCLOSURE OF ANY OF THIS DRAWING OR INFORMATION IS INTENDED TO OPERATE AS A LICENSE OR AUTHORIZATION TO USE IT FOR ANY PURPOSE WITHOUT THE SPECIFIC WRITTEN CONSENT OF OVERHEAD DOOR CORPORATION.

REF DWG	USED ON

THIRD ANGLE PROJECTION

ASME Y14.100 AND Y14.5 APPLY, UNLESS OTHERWISE SPECIFIED DIMENSIONS ARE IN U.S. CUSTOMARY UNITS.

TOLERANCES UNLESS OTHERWISE SPECIFIED	
WHOLE NUMBERS:	±.25
.X	±.1
.XX	±.01
.XXX	±.005
ANGLES:	±1°
HOLES:	±.003

FINISH

UNIT OF MEASURE INCHES

A Subsidiary of Overhead Door Corporation
22760 Lake Park Blvd.
Alliance Ohio, 44601

MATERIAL:

	NAME	DATE
DRAWN BY:	JMW	05/17/05
CHECKED BY:	WDR	09/23/05
APPROVED BY:	RUSSO	09/26/05

DRAWING TITLE: FINAL PACK, 4060L

DRAWING NUMBER: D– 35610

SCALE: 1/3 SHEET 2 OF 2