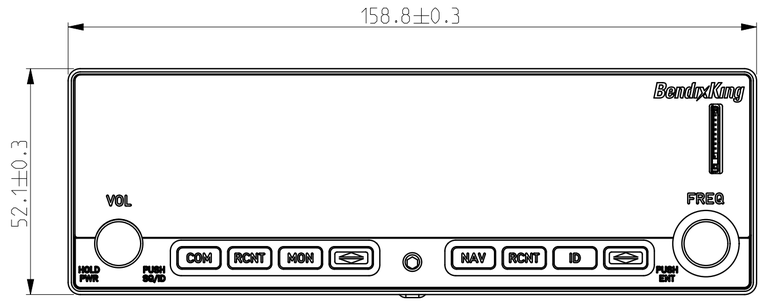

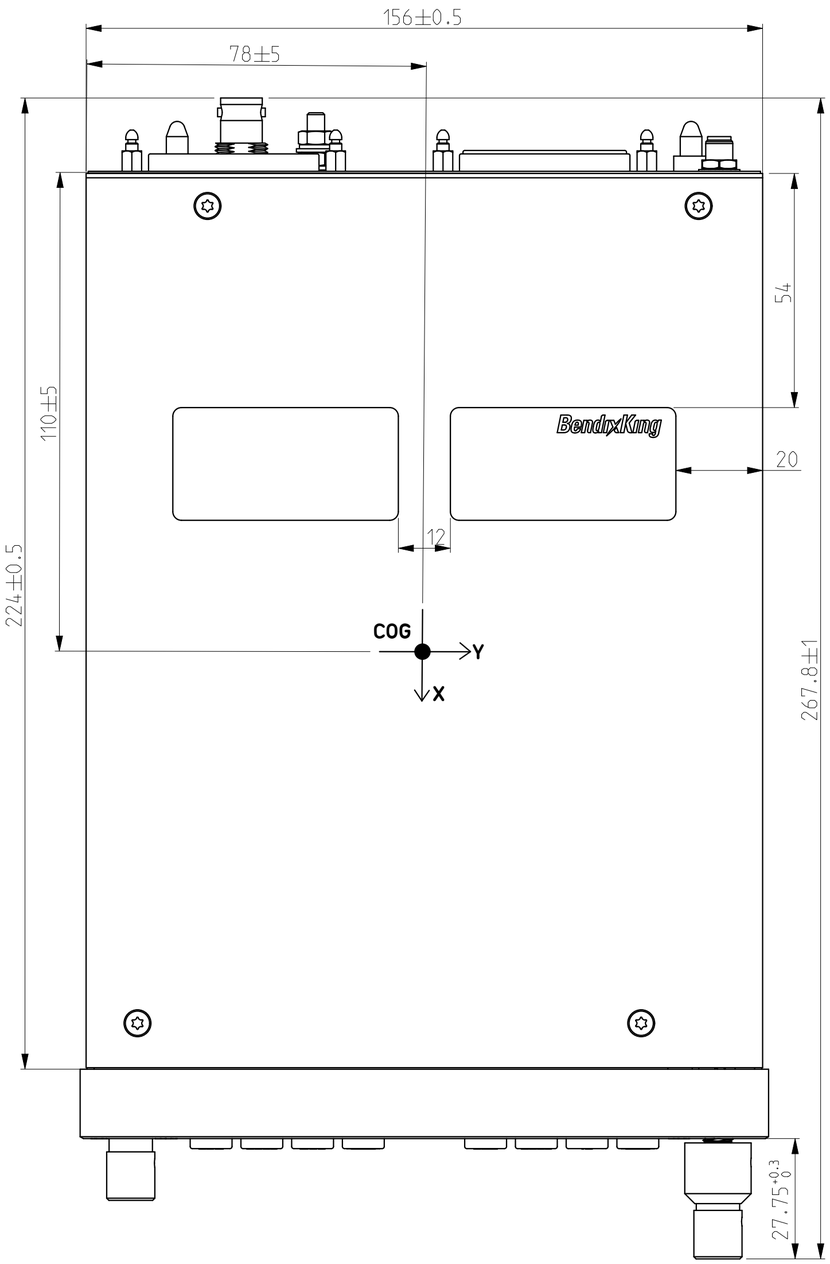

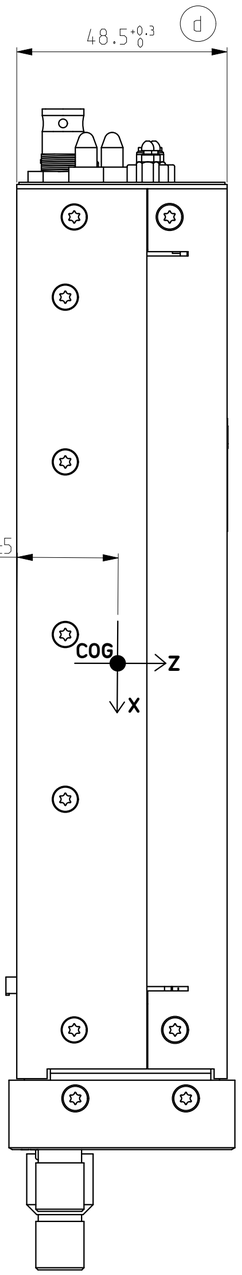

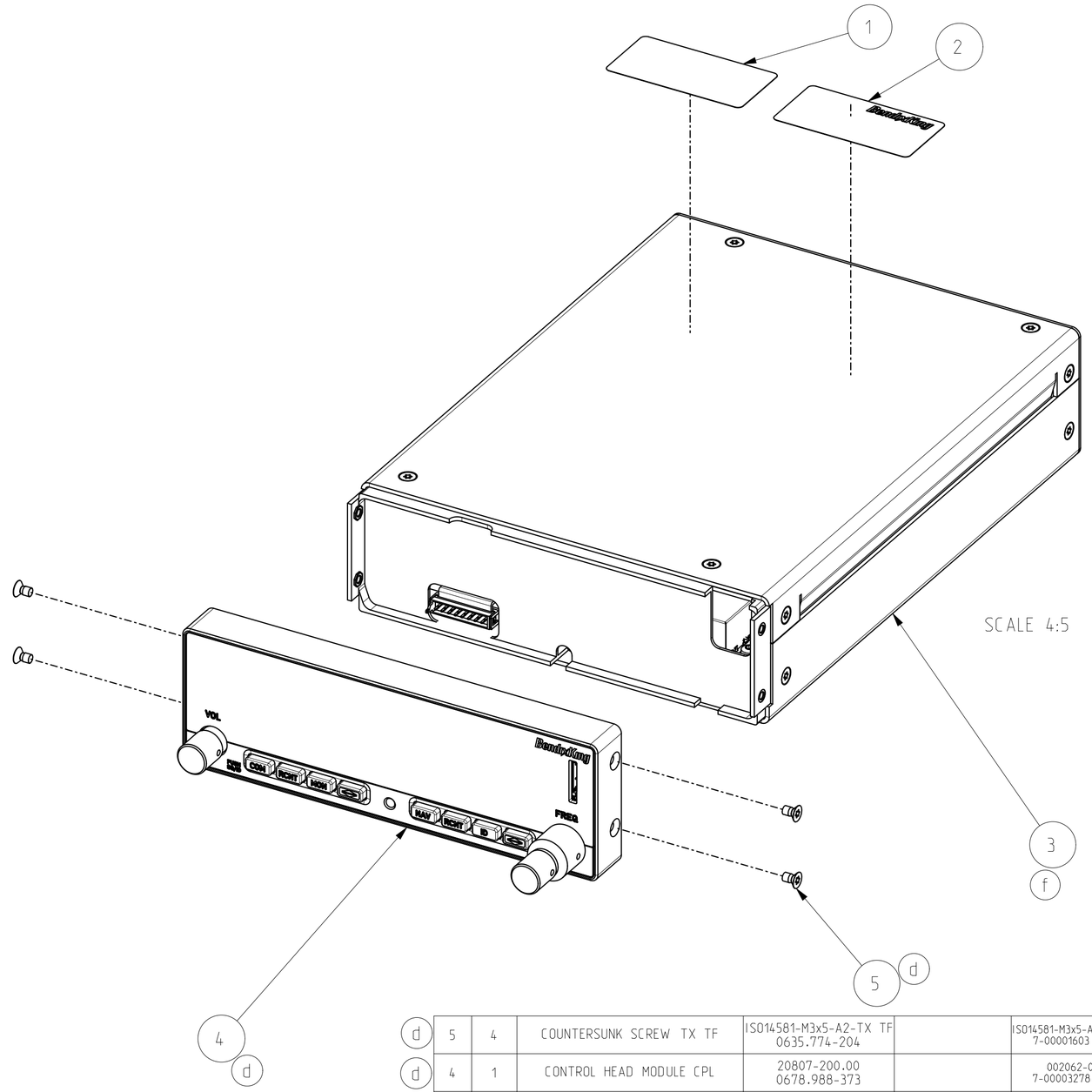

	ITEM	QUAN.	TITLE	DRAWING - NUMBER ART - NUMBER	REMARKS	REPOSITORY ID /MDL Revision
d	5	4	COUNTERSUNK SCREW TX TF	ISO14581-M3x5-A2-TX TF 0635.774-204		ISO14581-M3x5-A2-TX TF 7-00001603 / A
d	4	1	CONTROL HEAD MODULE CPL	20807-200.00 0678.988-373		002062-00 7-00003278 / B
f	3	1	CORE MODULE CPL	20807-100.00 0678.971-373		002071-00 7-00003517 / F
	2	1	ID PLATE	20807-000.02 0687.855-254		002070-03 - / A
	1	1	ID PLATE	20807-000.01 0679.402-254		002070-01 - / A

SURFACES √.... Ra in µm

DIMENSIONS IN MM. ALLOWABLE DEVIATION FOR DIMENSIONS WITHOUT TOLERANCES: DIN ISO 2768 T1 MIDDLE

... 6	±0.1	> 30 ... 120	±0.3	> 400 ... 1000	±0.8
> 6 ... 30	±0.2	> 120 ... 400	±0.5	> 1000 ... 2000	±1.2

COPYING OF THIS DOCUMENT, AND GIVING IT TO OTHERS AND THE USE OR COMMUNICATION OF THE CONTENTS THEREOF, ARE FORBIDDEN WITHOUT EXPRESS AUTHORITY. OFFENDERS ARE LIABLE TO THE PAYMENT OF DAMAGES. ALL RIGHTS ARE RESERVED IN THE EVENT OF THE GRANT OF A PATENT OR THE REGISTRATION OF A MODEL OR DESIGN.

IDX	CHANGE-NUMBER	DATE	NAME
.	.	.	.
.	.	.	.
.	.	.	.
.	.	.	.
.	.	.	.
f	CR240032	2024-07-03	MWo
e	CR240019 CR240020	2024-04-11	MWo
d	CR240014	2024-03-15	MWo
c	CR240012	2024-02-15	MWo
b	CR240002	2024-01-16	MWo
a	CR240001	2023-12-27	MWo

WEIGHT		
2023	DATE	NAME
DRAWN	15.05	MWo
CHECK		
APPR.		

COPYRIGHT DIN 34-2

BECKER AVIONICS INTERNATIONAL

FINISH

MATERIAL

RAW-ART-NO.

TITLE NCT6500-(120)

SCALE 1:1

DWG-NO 20807-000.00

SIZE A2

ART-NO 0678.090-902

SHEET 1/1

DRAWING DISTRIB.	
TD	1
KB	1
EK	1
IE	1
WEP	1
QW	1

	DWG	MDL
Repository ID	7-00003518	002070-00
	F.3	F.2

M: Miroslaw Wozny	2024-04-11	
D: Miroslaw Wozny	2024-07-03	

File name : 002070-00