DATE	SYM	REVISION RECORD	DR	CK
			DK	DK

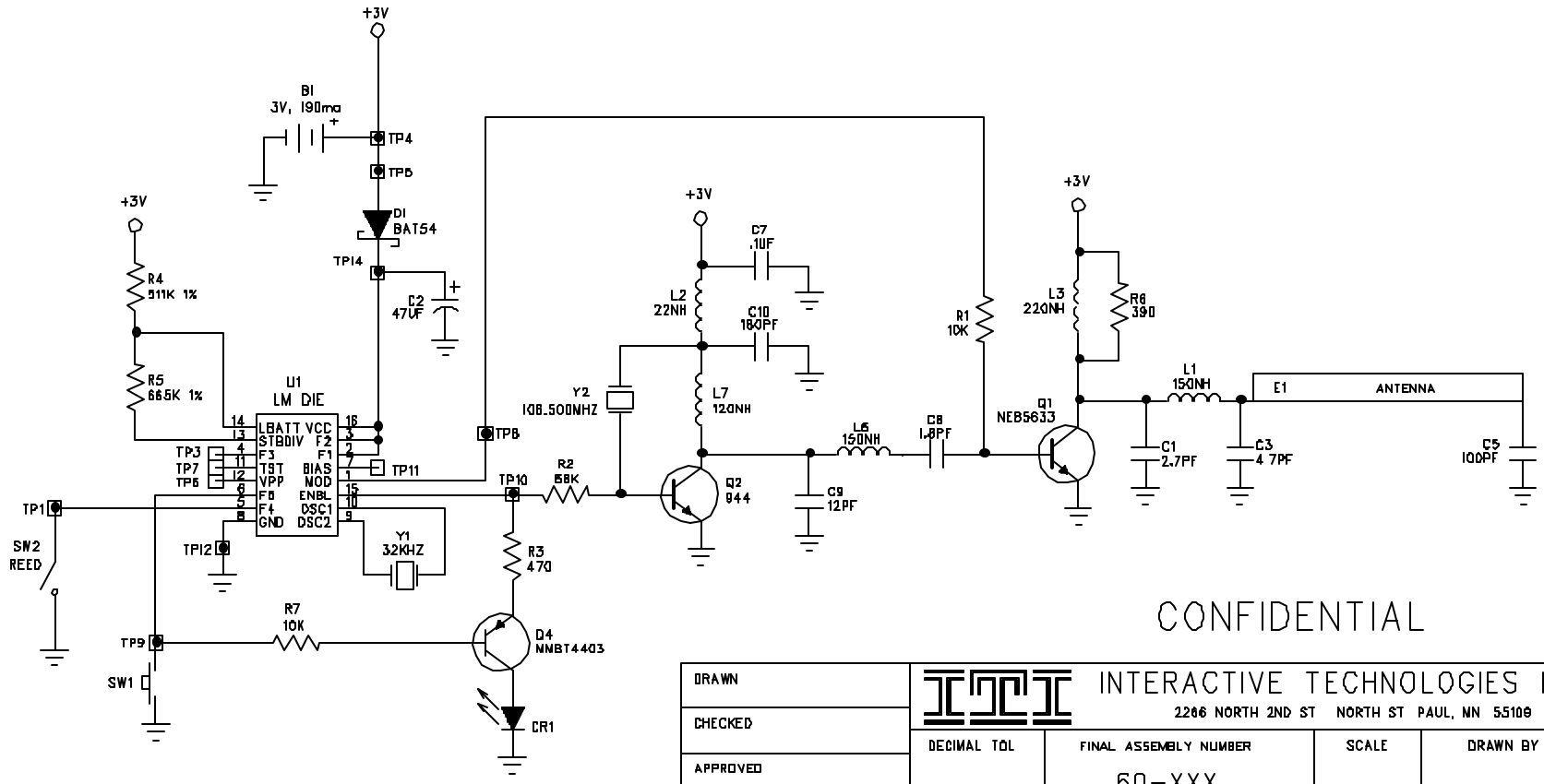

CONFIDENTIAL

DRAWN	INTERACTIVE TECHNOLOGIES INC. 2266 NORTH 2ND ST NORTH ST PAUL, MN 55109			
CHECKED				
APPROVED	DECIMAL TOL	FINAL ASSEMBLY NUMBER 60-XXX	SCALE	DRAWN BY
	FRACT. TOL.	TITLE Y2K PANIC		
	ANGULAR TOL	DATE 2/24/00	SIZE	PART NUMBER 52-781	REV. A

REV.	ECO#	DATE	CHANGED BY

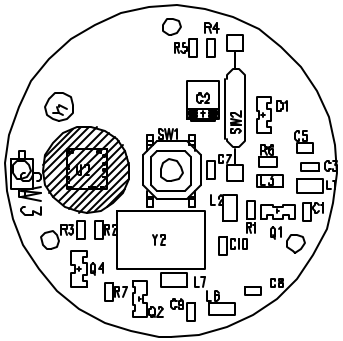

CONFIDENTIAL

DRAWN BY			
CHECKED BY			
APPROVED BY			

ITI INTERACTIVE TECHNOLOGIES INC.

DEC. TOL.	TOP LEVEL ASSY. #	SCALE	DRAWN BY
N/A	60-	2:1	[illegible]

FRAC. TOL.	TITLE
N/A	Y2K PANIC TOP SIDE PPD

ANG. TOL.	DATE	SIZE	PART NUMBER	REV.
N/A	3/17/00	B	57- 781	A