DATE	SYM	REVISION RECORD	DR	CK
			DK	DK

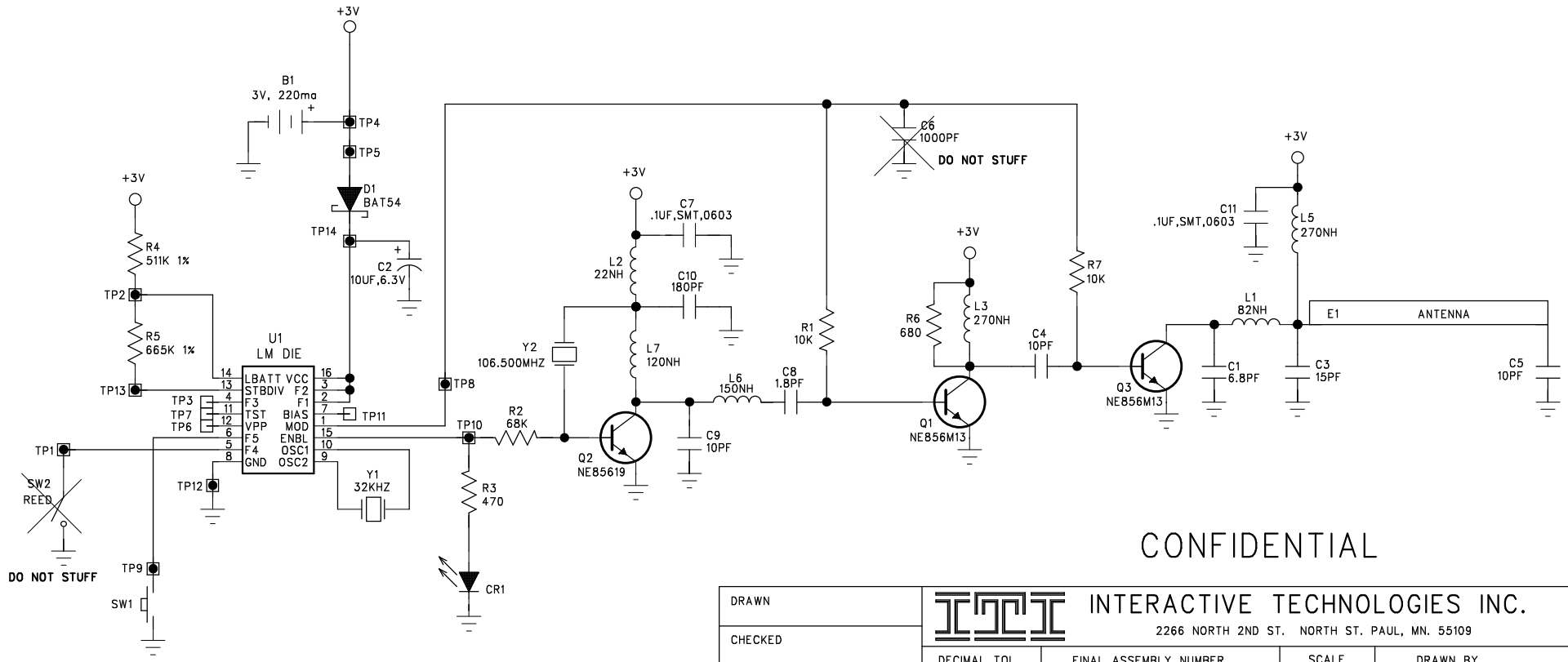

CONFIDENTIAL

DRAWN	INTERACTIVE TECHNOLOGIES INC. 2266 NORTH 2ND ST. NORTH ST. PAUL, MN. 55109		
CHECKED	DECIMAL TOL.	FINAL ASSEMBLY NUMBER 60-XXX	SCALE	DRAWN BY
APPROVED	FRACT. TOL.	TITLE MICRO PANIC		
	ANGULAR TOL.	DATE 8/28/1	SIZE	PART NUMBER 52-781	REV. B

REV.	ECO#	DATE	CHANGED BY

DO NOT STUFF C6, SW2.

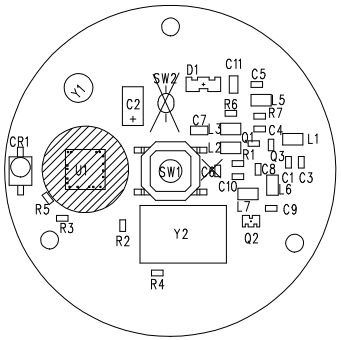

CONFIDENTIAL

DRAWN BY			
CHECKED BY			
APPROVED BY			

ITI INTERACTIVE TECHNOLOGIES INC.

DEC. TOL.	TOP LEVEL ASSY. #	SCALE	DRAWN BY
N/A	60-	2:1	[illegible]

FRAC. TOL.	TITLE
N/A	MICRO PANIC TOP SIDE PPD

ANG. TOL.	DATE	SIZE	PART NUMBER	REV.
N/A	8/28/1	A	57- 781	B

REV.	ECO#	DATE	CHANGED BY

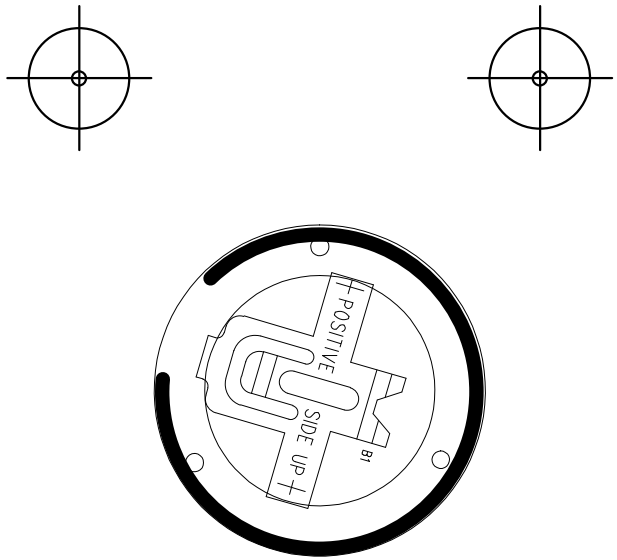

DRAWN BY			
CHECKED BY			
APPROVED BY			

INTERACTIVE TECHNOLOGIES INC.

DEC. TOL.	TOP LEVEL ASSY. #	SCALE	DRAWN BY
N/A	60-	2:1	R

FRAC. TOL.	TITLE
N/A	MICRO PANIC BACK SIDE ASSY.

ANG. TOL.	DATE	SIZE	PART NUMBER	REV.
N/A	8/28/1	A	57-781	B