DATE	SYM	REVISION RECORD	DR	CK
5/00	A1	200266	DM	

RAW PCB 55-710

ESD# 422-1727

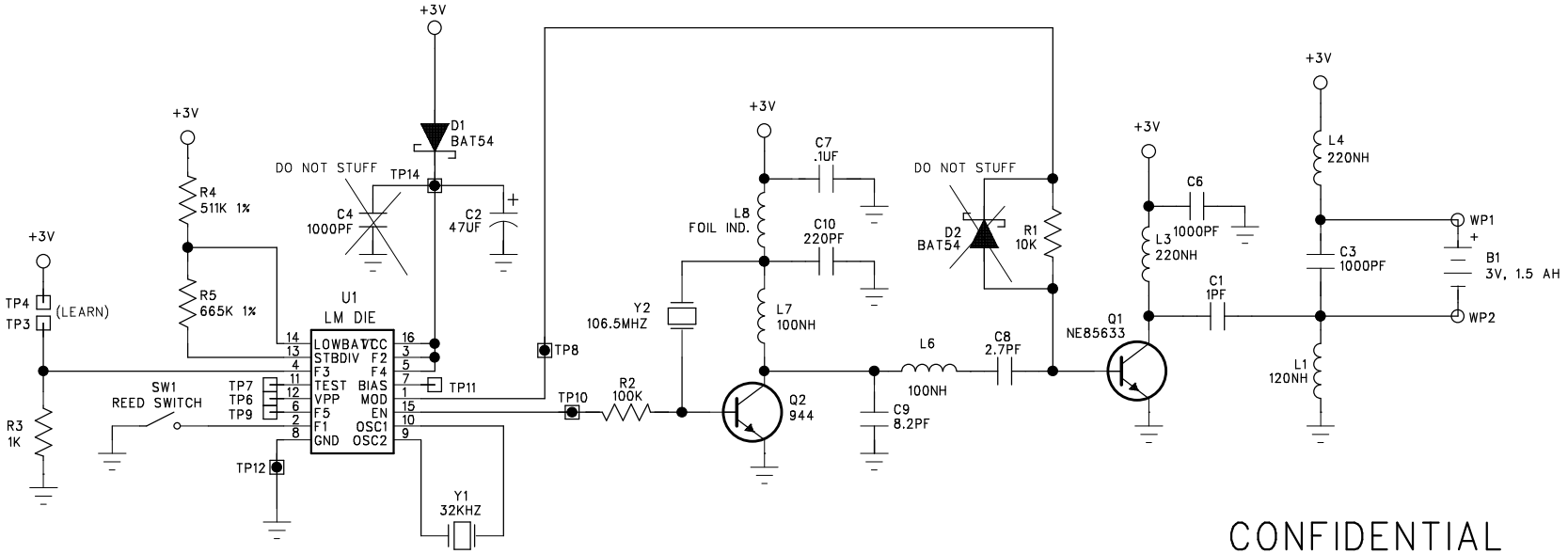

CONFIDENTIAL

DRAWN	INTERACTIVE TECHNOLOGIES INC. 2266 NORTH 2ND ST. NORTH ST. PAUL, MN. 55109			
CHECKED				
APPROVED	DECIMAL TOL.	FINAL ASSEMBLY NUMBER 60-741-95	SCALE	DRAWN BY
	FRACT. TOL.	TITLE RECESSED MICRO DWS		
	ANGULAR TOL.	DATE 3/2/98	SIZE B	PART NUMBER 52-710	REV. A1