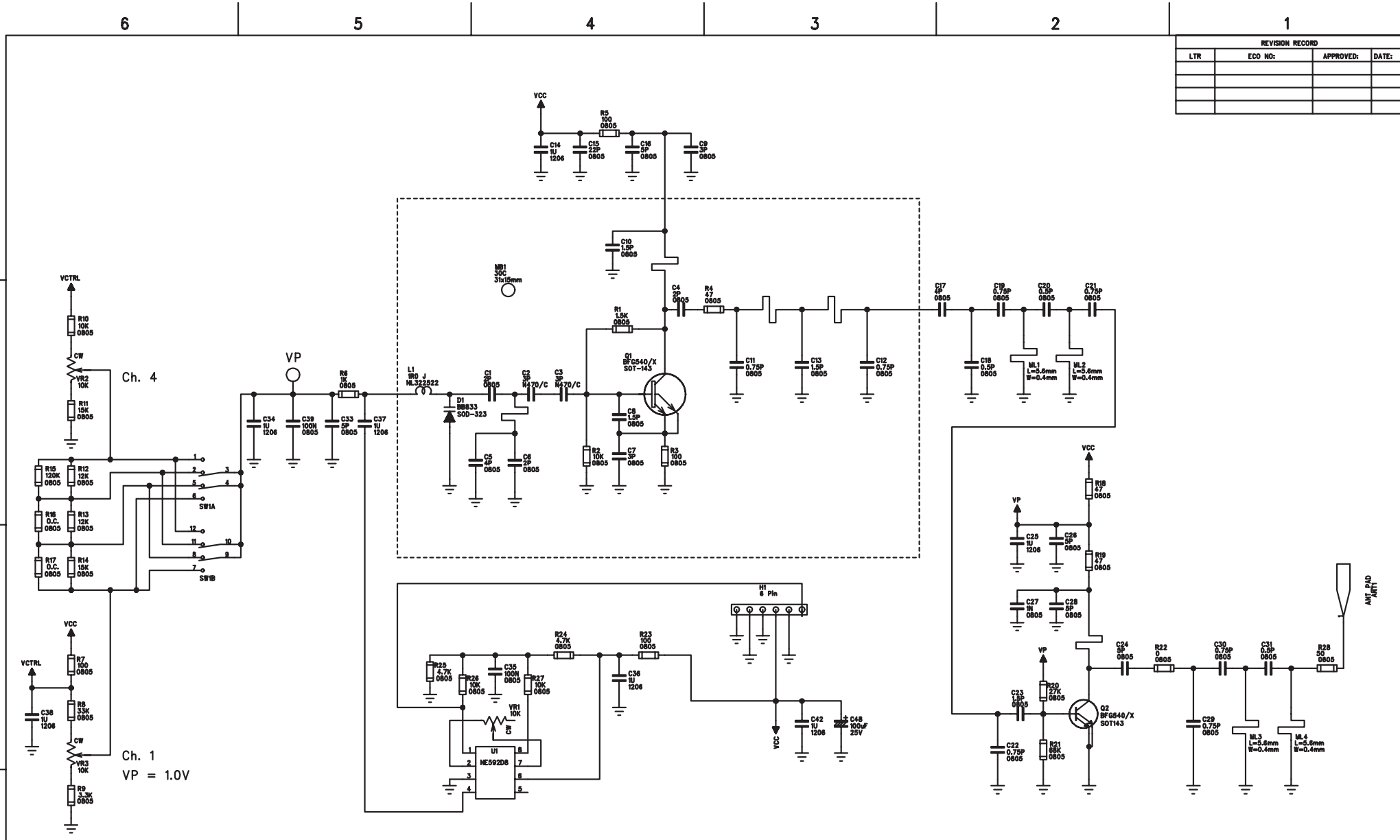

REVISION RECORD			
LTR	ECO NO:	APPROVED:	DATE:

COMPANY: System X-10 Limited			
TITLE: 2.4G Video-Tx RF (L.C.)			
DRAWN: Terence	DATED: 980716	CODE:	SIZE: A4
CHECKED: Terence	DATED: 980716	DRAWING NO:	REV: 01
QUALITY CONTROL:	DATED:		
RELEASED:	DATED:	SCALE: 1 to 1	SHEET: 1 OF 1