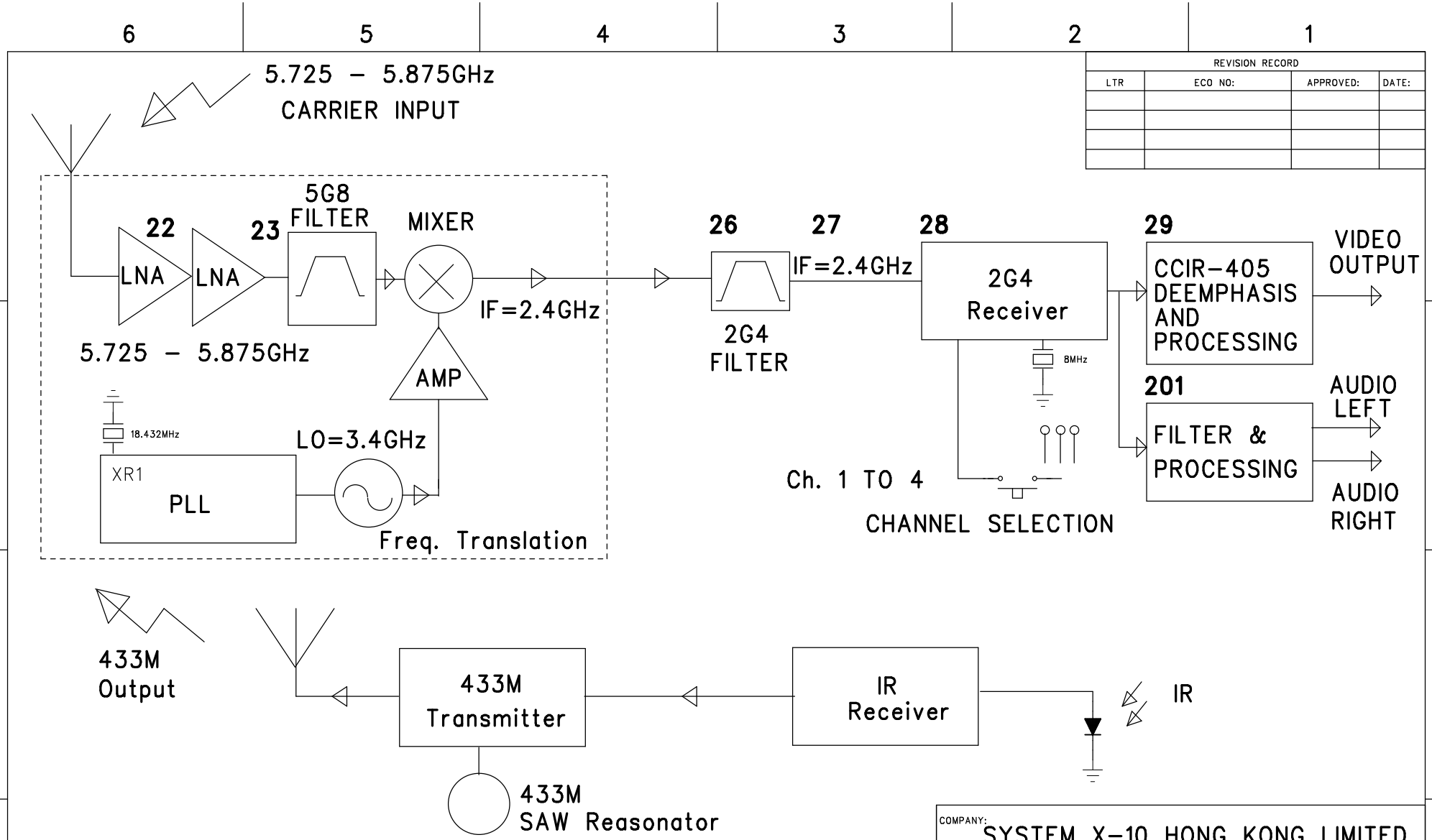

REVISION RECORD			
LTR	ECO NO:	APPROVED:	DATE:

DRAWN: Kam	DATED: 20071231
CHECKED:	DATED: 20080110
QUALITY CONTROL:	DATED:
RELEASED:	DATED:

COMPANY: SYSTEM X-10 HONG KONG LIMITED

TITLE: 5GHz VIDEO RECEIVER BLOCK_B

MODEL: VR50A

CODE:	SIZE:	DRAWING NO:	REV:
		SCH.5G TXL Receiver_BLOCK_B	

SCALE: SHEET: OF