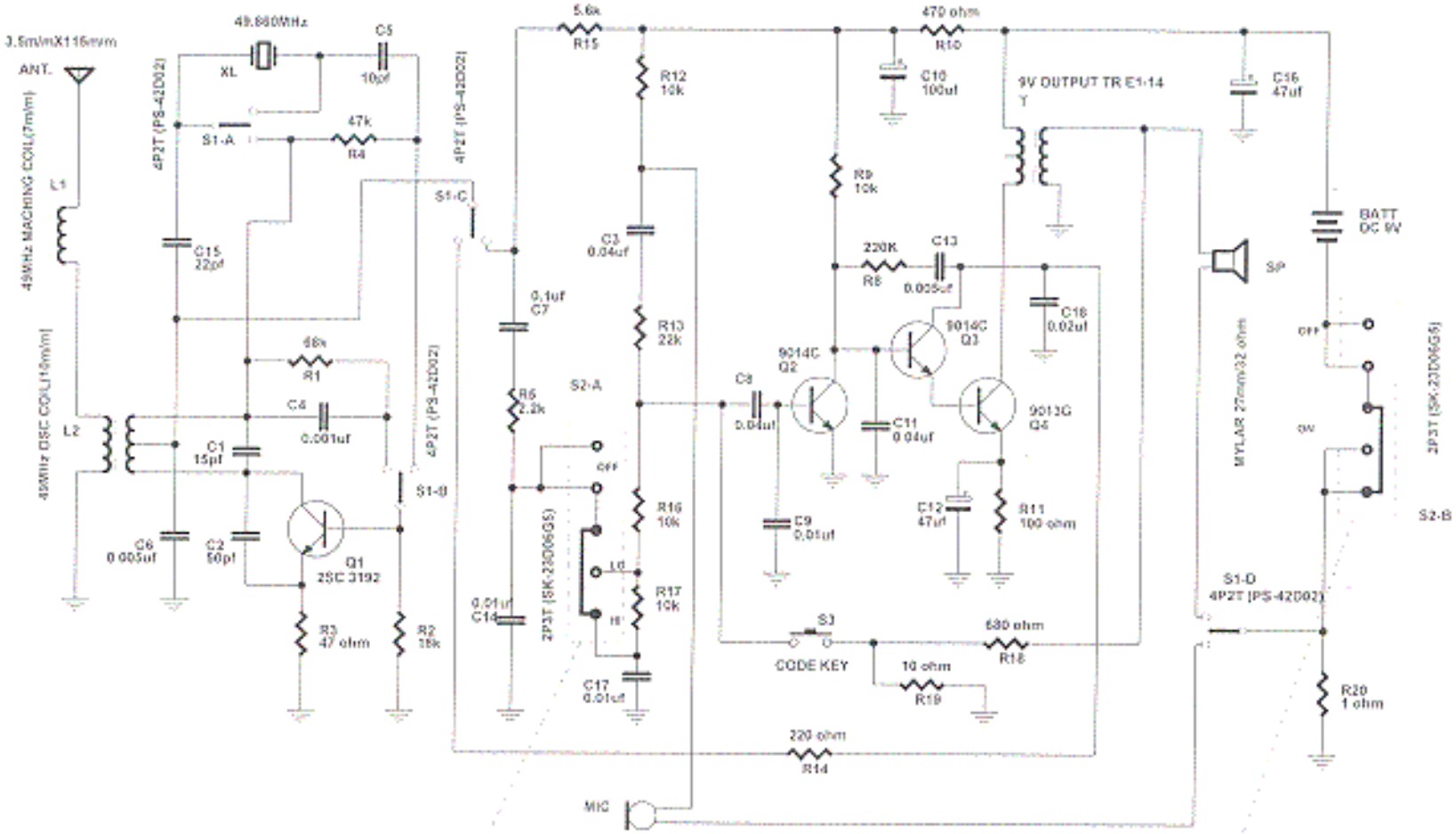

SUBJECT TO CHANGE WITHOUT NOTICE

Title	EA-299 SCHEMATIC DIAGRAM		
Size A4	Number		Revision A
Date: 28-Oct-1999 File: C:\EASIA\EA299\FCC-A.SCH		Sheet of Drawn By:	

East Asia Radio Factory Ltd.
FCC ID: B4GEA-299
Exhibit #: 3