REVISIONS			
REV	DESCRIPTION	BY	DATE
A	ORIGINAL ISSUE	DMS	10-13-98
B	COMPONENT UPDATES IN OUTPUT,VCO AND ISO AMP STAGES	DMS	1-6-99
C	SECOND FAB RELEASE	DMS	1-21-99
D	UPDATE TO MATCH BOM AND LAYOUT CORRECTIONS	DMS	1-28-99

SUPPLY	CONFIGURATION
LOCAL BATTERY	CONNECT SPST SWITCH BETWEEN PINS 1 AND 2 OF J5
PA BOARD	CONNECT PA 3.3V OUTPUT BETWEEN PINS 2 AND 3 OF J5 3.3V=PIN 2 - GROUND=PIN 3

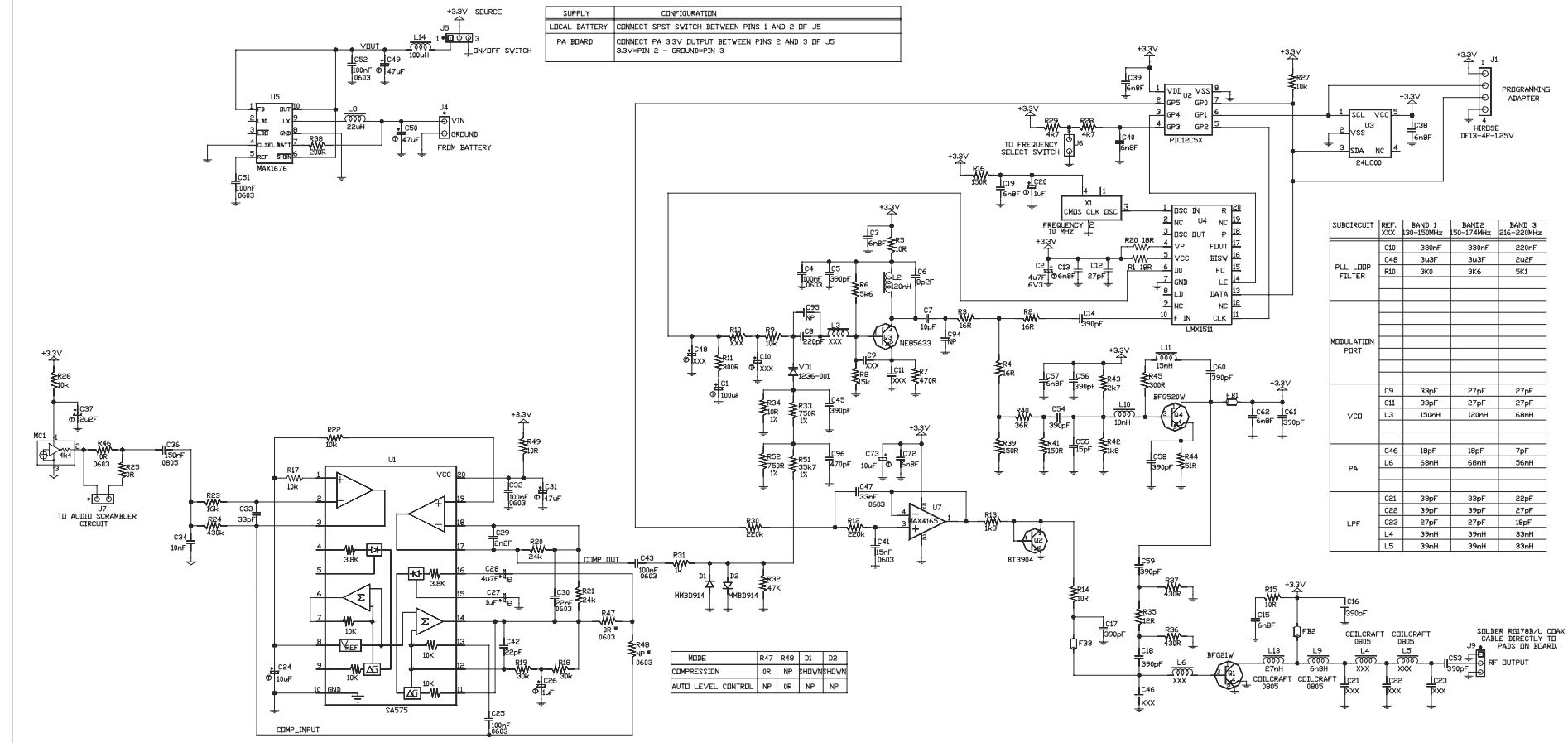

SUBCIRCUIT	REF. XXX	BAND 1 130-150MHz	BAND2 150-174MHz	BAND 3 216-220MHz
PLL LOOP FILTER	C10	330nF	330nF	220nF
	C48	3u3F	3u3F	2u2F
	R10	3K0	3K6	5K1
MODULATION PORT				
VCO	C9	33pF	27pF	27pF
	C11	33pF	27pF	27pF
	L3	150nH	120nH	68nH
PA	C46	18pF	18pF	7pF
	L6	68nH	68nH	56nH
LPF	C21	33pF	33pF	22pF
	C22	39pF	39pF	27pF
	C23	27pF	27pF	18pF
	L4	39nH	39nH	33nH
	L5	39nH	39nH	33nH

MODE	R47	R48	D1	D2
COMPRESSION	0R	NP	SHOWN	SHOWN
AUTO LEVEL CONTROL	NP	0R	NP	NP

REFERENCE DESIGNATORS	
HIGHEST	UN-USED
C96	C44 C63-71 C74-93
R52	
L14	L1 L7
Q4	
J9	J2 J3 J8
VD1	
U7	U6
D2	
X1	
MC1	

NOTES:
1) ALL COMPONENT VALUES MARKED XXX ARE LOCATED IN CHART.
2) ALL RESISTORS ARE 0402 5% COMPONENTS UNLESS DESIGNATED OTHERWISE.
3) ALL CAPACITORS <10nF ARE 0402 UNLESS DESIGNATED OTHERWISE.
4) ALL INDUCTORS <100nH ARE TDKD LL1608 SERIES UNLESS DESIGNATED OTHERWISE.

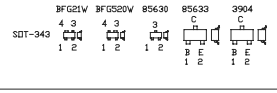

THIS DOCUMENT CONTAINS PROPRIETARY INFORMATION AND MAY NOT BE DISCLOSED TO OTHERS FOR ANY PURPOSE NOR USED FOR MANUFACTURING PURPOSES WITHOUT WRITTEN CONSENT FROM AUDIO INTELLIGENCE DEVICES INC.

SCALE:	DO NOT	DATE	SIZE B
DRAFT	DMS	29-OCT-98	AUDIO INTELLIGENCE DEVICES 12301 NW 39th STREET CORAL SPRINGS, FL 33065
CHECK	M WOLSKI		PROJ: AID FM TRANSMITTER
APPROVE			
PRINT	HP 4MV	<DATE>	TITLE: SCHEMATIC
FILE	AID.DBF		DWG# AI0101 — SHEET 1 OF 1