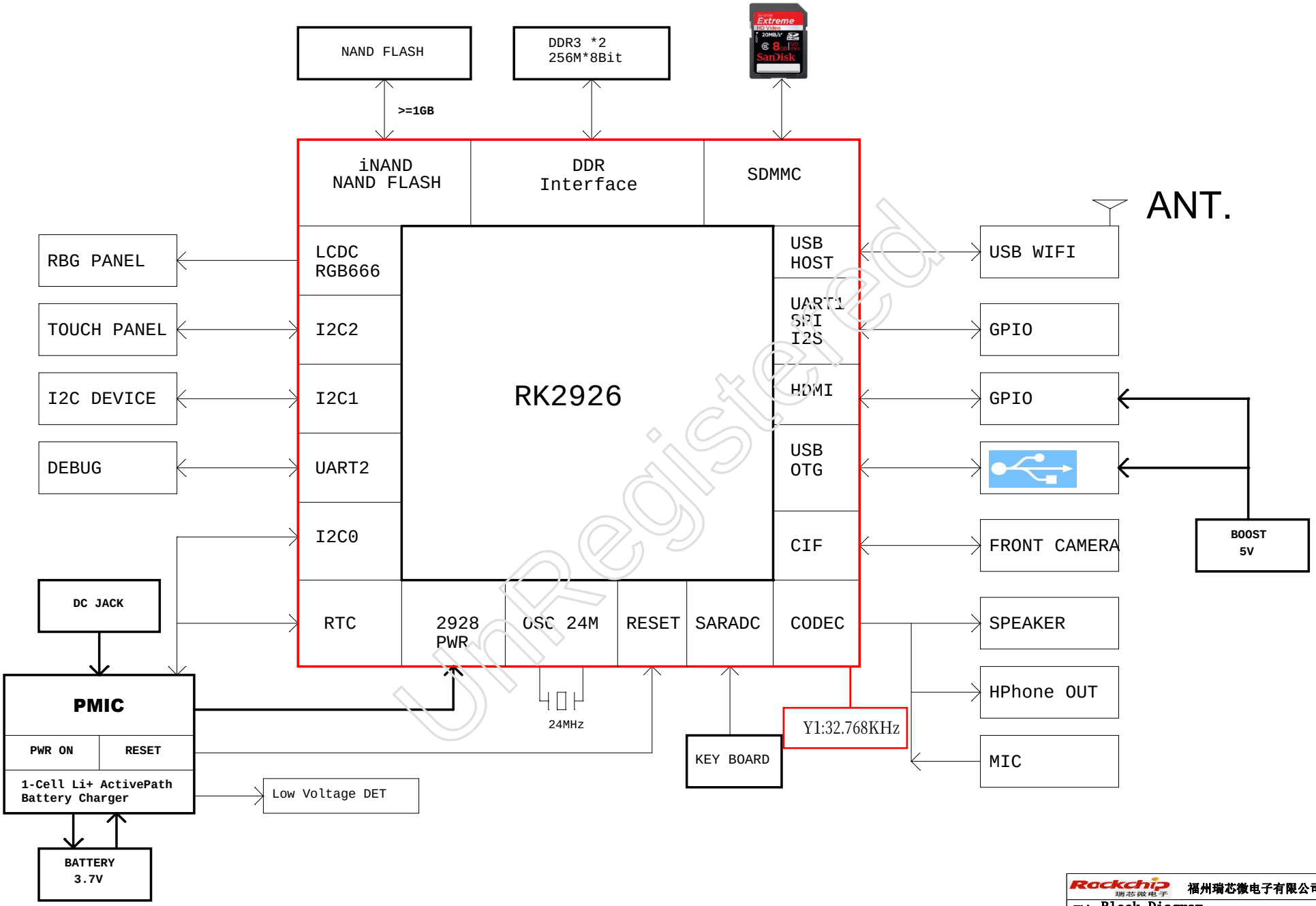


UnRegistered

Rockchip 瑞芯微电子 福州瑞芯微电子有限公司

| | |
|---|---|
| Title: Block Diagram | |
| File: 86V-2926 | REV: 1.1 |
| Create Date: Saturday, October 23, 2010 | Page Num: 3 |
| Modify Date: Monday, May 13, 2013 | Page Total: 15 |

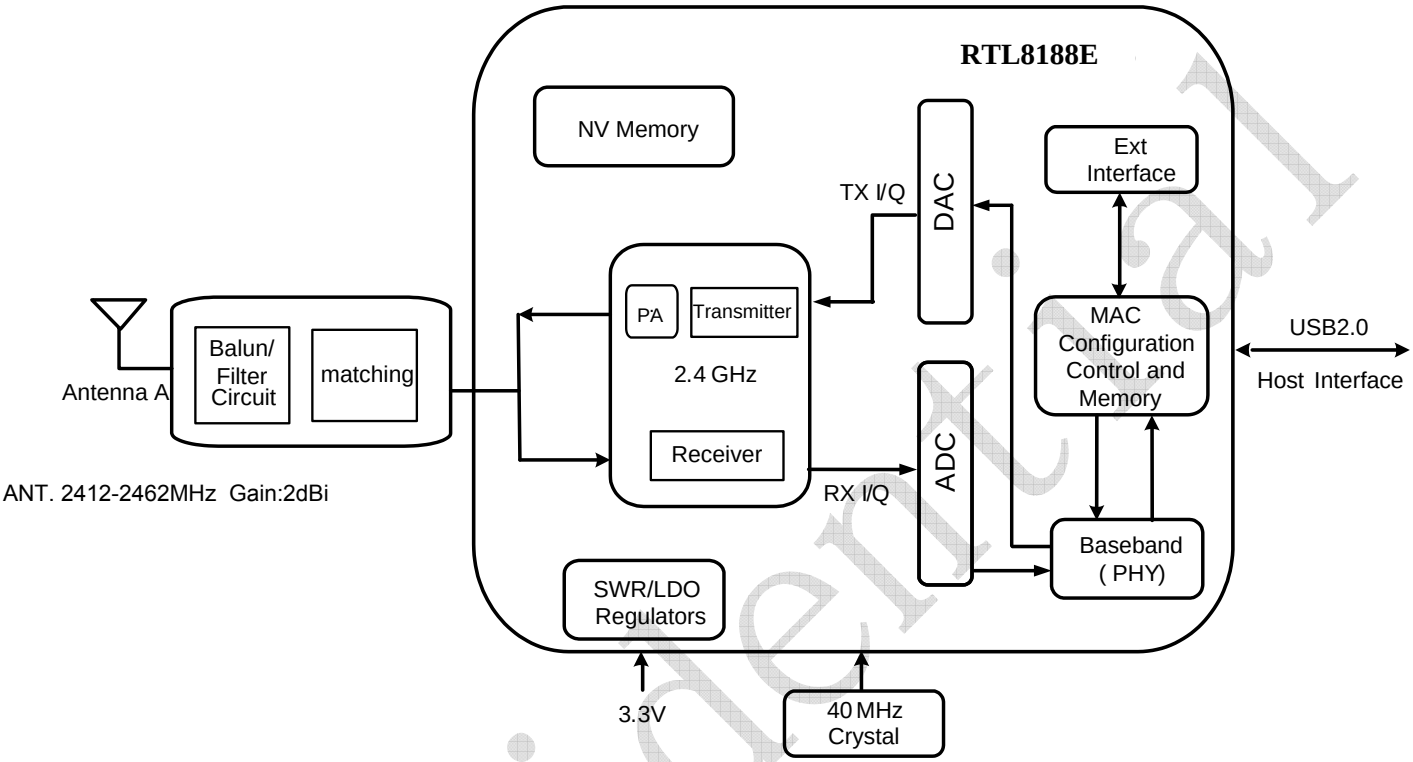


**Figure 1. Single-Band 11n (1x1) Solution**

Confidential