SCHEMATIC DIAGRAMS

The following schematic diagrams show circuit connectivity.

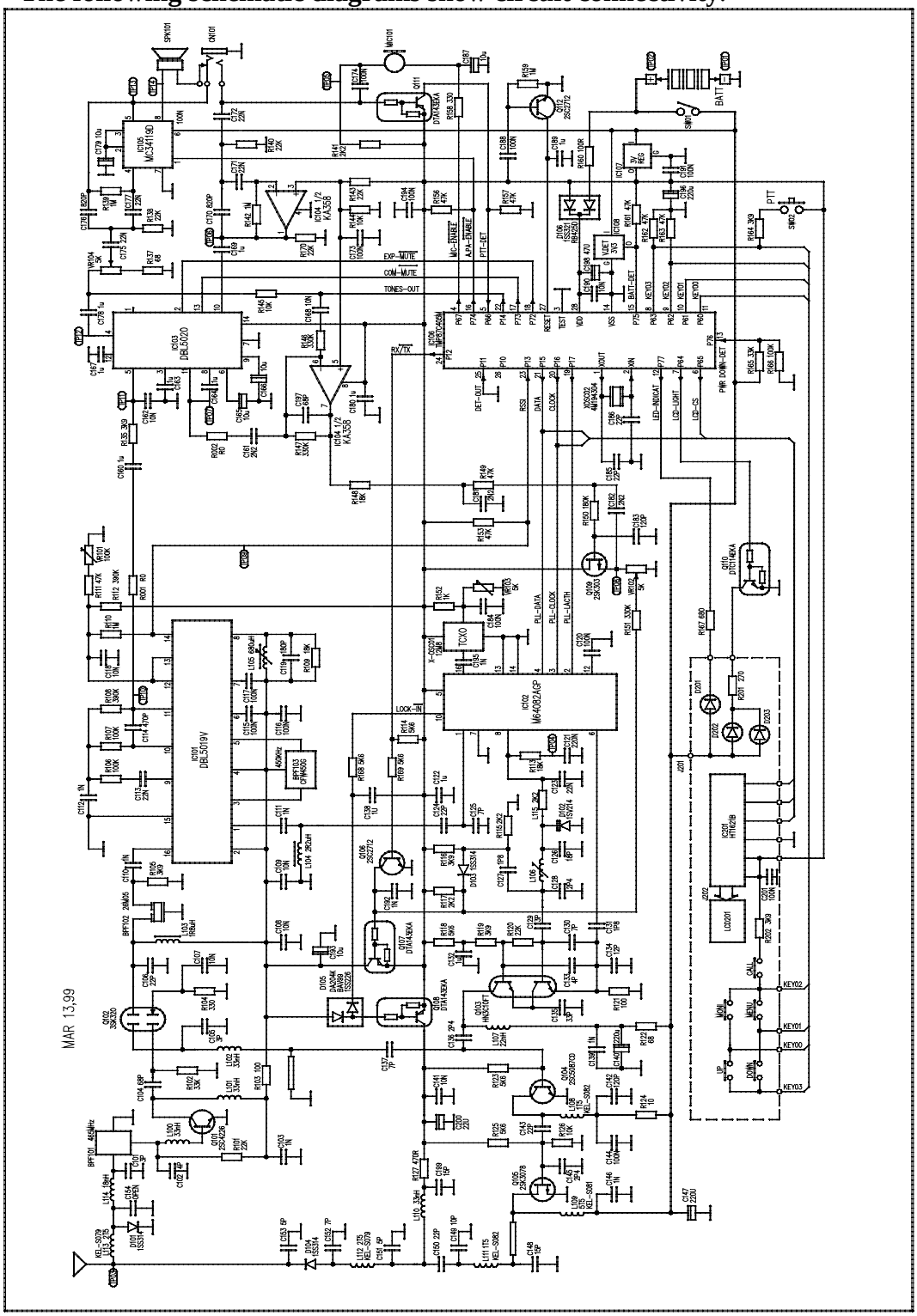

EXHIBIT 5