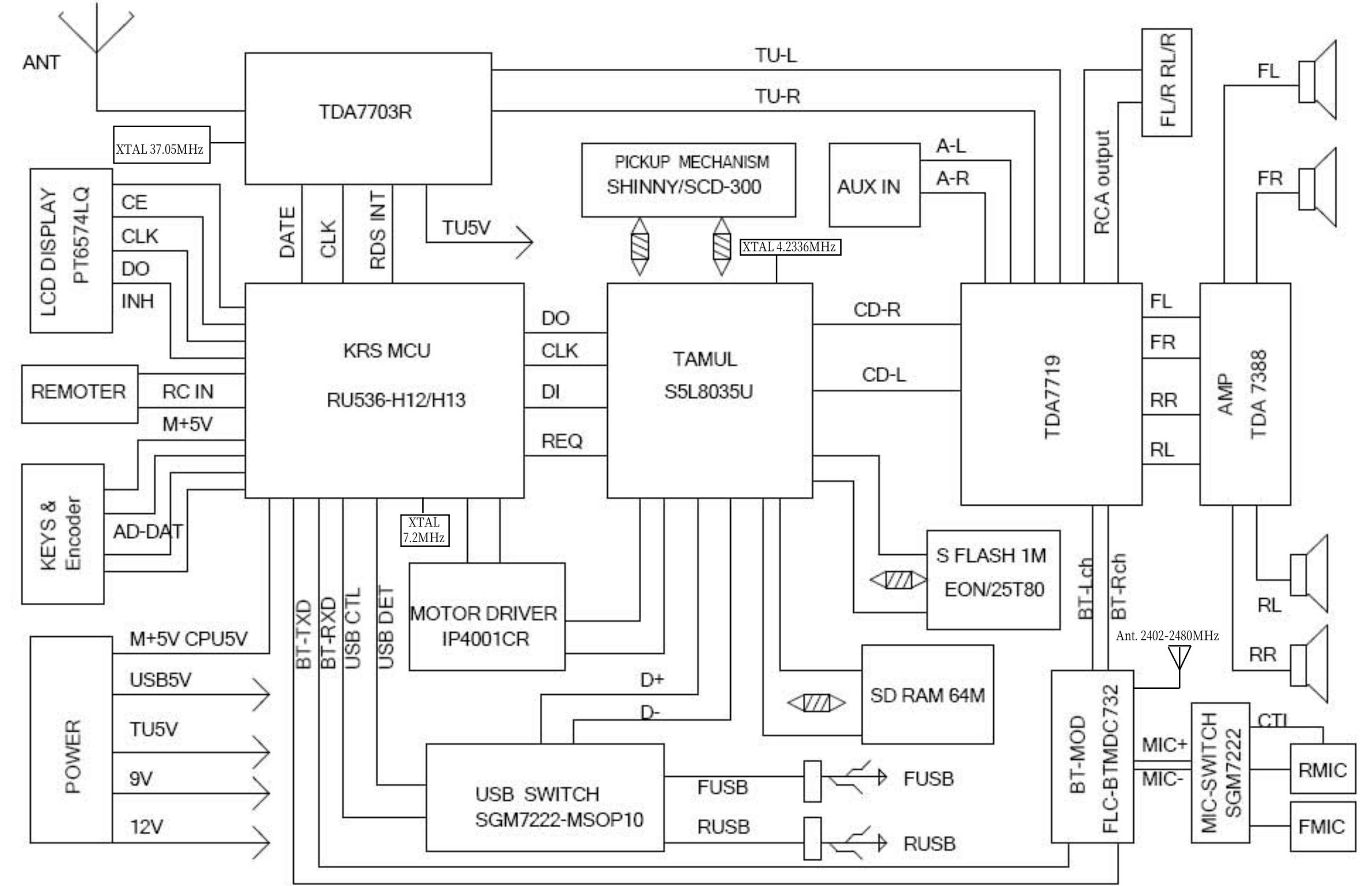
ANT
TDA7703R
TU-L
TU-R
XTAL 37.05MHz
LCD DISPLAY
PT6574LQ
CE
CLK
DO
INH
DATE
CLK
RDS INT
TU5V
PICKUP MECHANISM
SHINNY/SCD-300
XTAL 4.2336MHz
AUX IN
A-L
A-R
RCA output
FL/R RL/R
FL
FR
KRS MCU
RU536-H12/H13
DO
CLK
DI
REQ
TAMUL
S5L8035U
CD-R
CD-L
TDA7719
FL
FR
RR
RL
AMP
TDA 7388
REMOTER
RC IN
M+5V
KEYS &
Encoder
AD-DAT
XTAL
7.2MHz
MOTOR DRIVER
IP4001CR
S FLASH 1M
EON/25T80
BT-Lch
BT-Rch
RL
RR
Ant. 2402-2480MHz
BT-TXD
BT-RXD
USB CTL
USB DET
POWER
M+5V CPU5V
USB5V
TU5V
9V
12V
D+
D-
SD RAM 64M
USB SWITCH
SGM7222-MSOP10
FUSB
RUSB
FUSB
RUSB
BT-MOD
FLC-BTMDC732
MIC+
MIC-
MIC-SWITCH
SGM7222
CTL
RMIC
FMIC

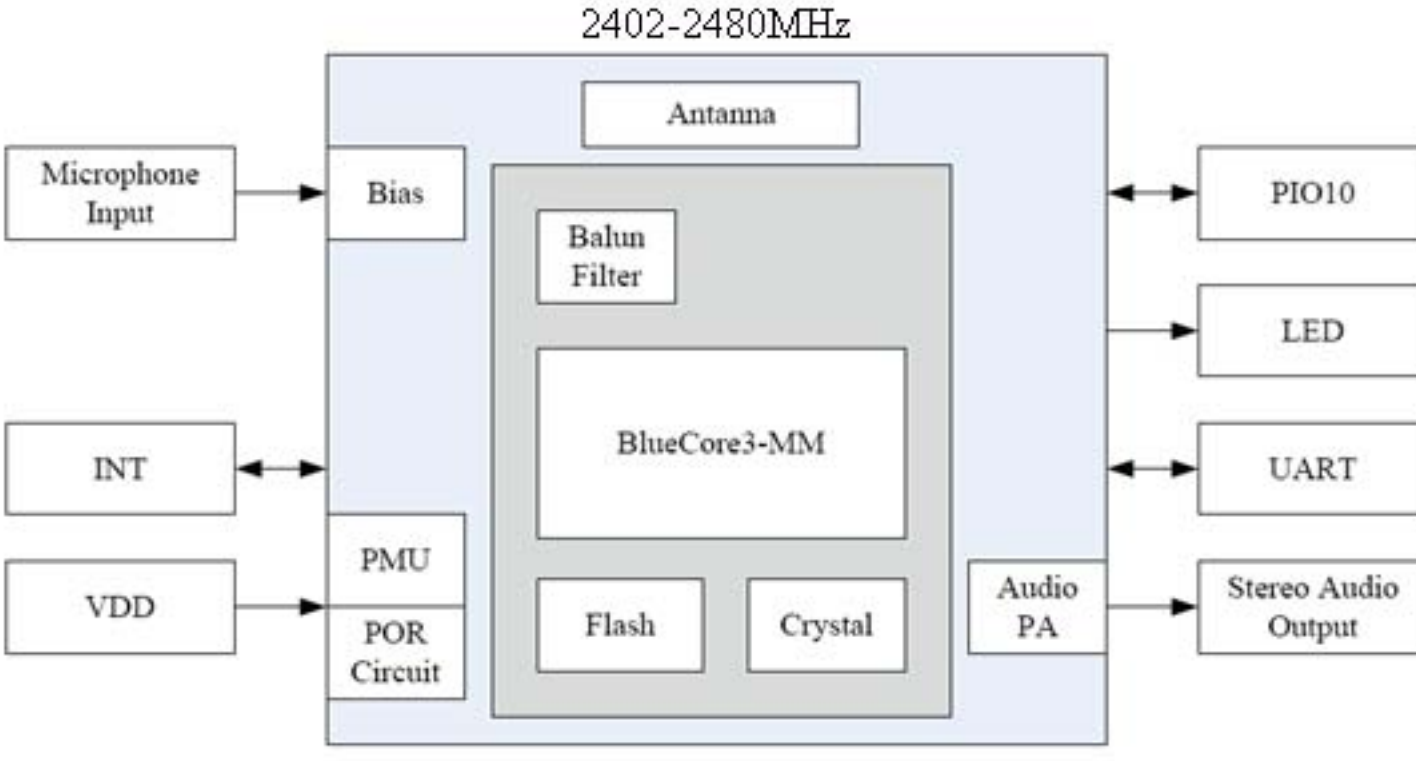
2402-2480MHz
Antanna
Microphone Input
Bias
Balun Filter
BlueCore3-MM
Flash
Crystal
INT
PMU
VDD
POR Circuit
Audio PA
PIO10
LED
UART
Stereo Audio Output