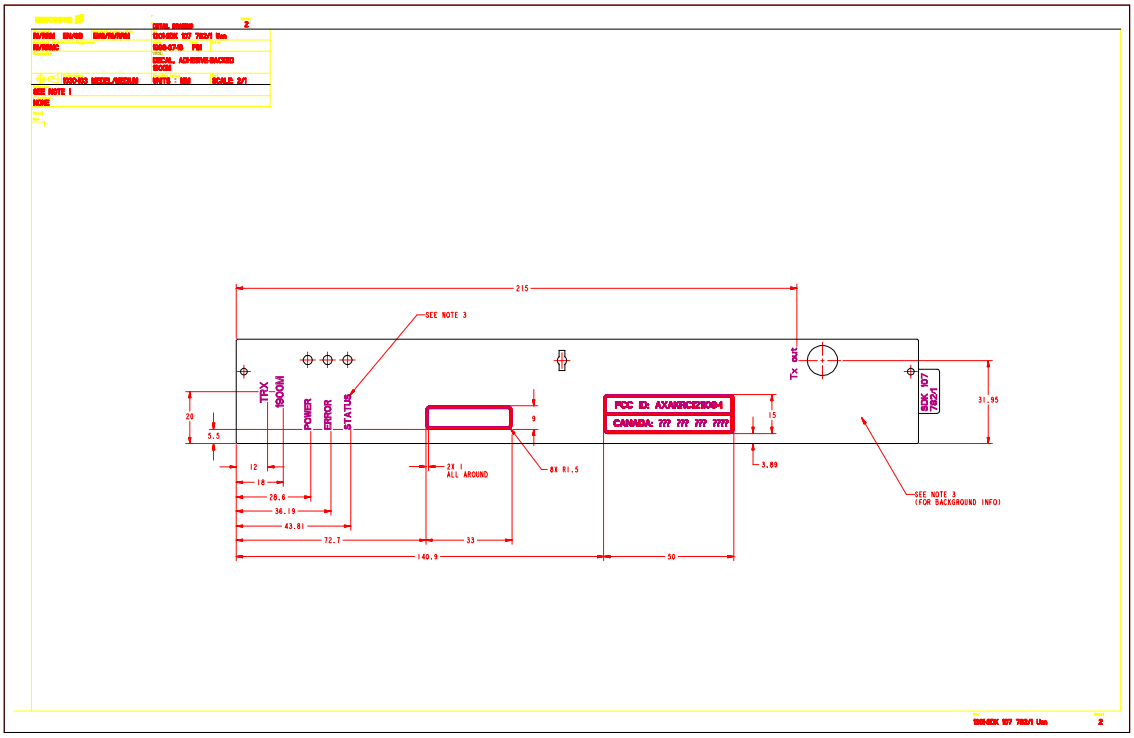
215
SEE NOTE 3
TRX
1900M
POWER
ERROR
STATUS
Tx out
FCC ID: AXAMRCE2009-1
CANADA: ??? ??? ??? ????
BOX 107
782/1
31.95
20
5.5
9
15
3.89
12
18
28.6
36.19
43.81
72.7
140.9
33
50
2X 1
ALL AROUND
8X R1.5
SEE NOTE 3
(FOR BACKGROUND INFO)
SEE NOTE 1
NONE
2