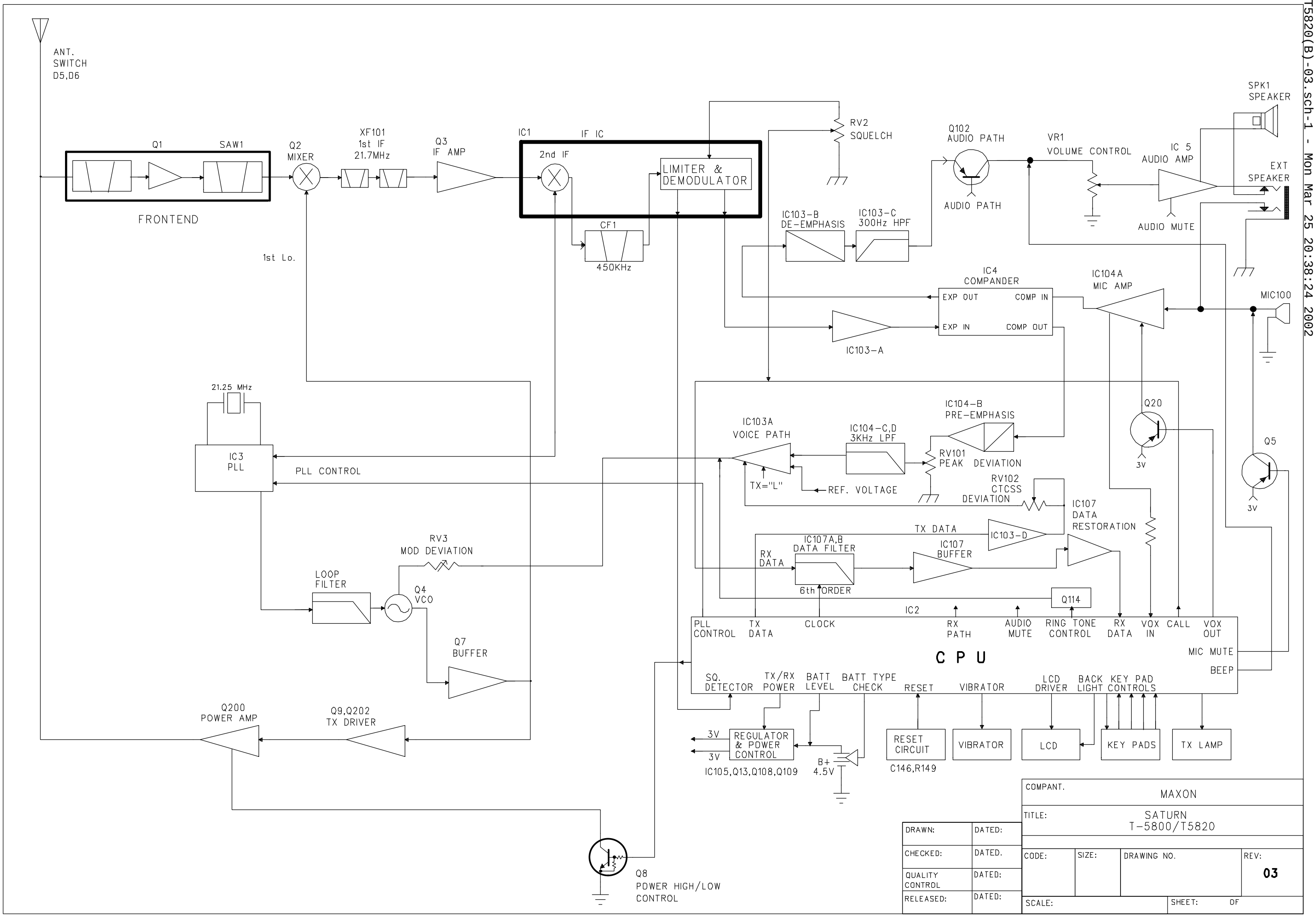

T5820(B)-03.sch-1 - Mon Mar 25 20:38:24 2002