# Wifi module

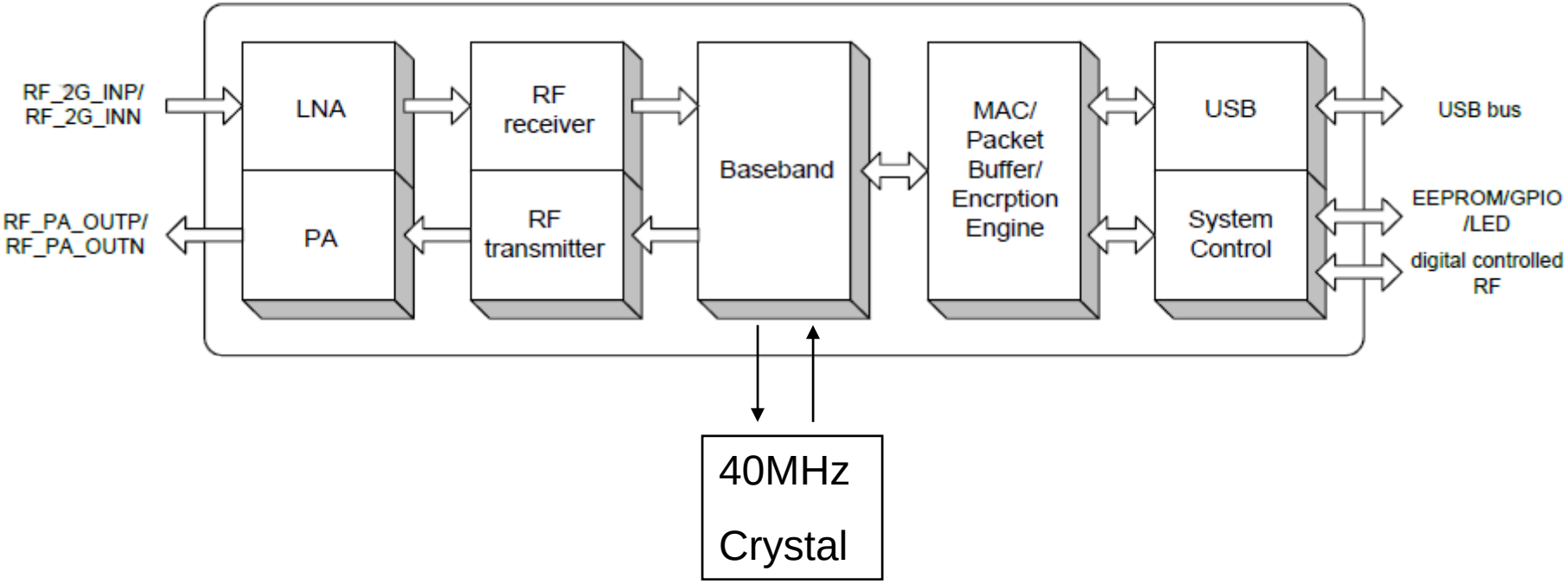
RF_2G_INP/
RF_2G_INN
RF_PA_OUTP/
RF_PA_OUTN
LNA
PA
RF
receiver
RF
transmitter
Baseband
MAC/
Packet
Buffer/
Encrption
Engine
USB
System
Control
USB bus
EEPROM/GPIO
/LED
digital controlled
RF
40MHz
Crystal

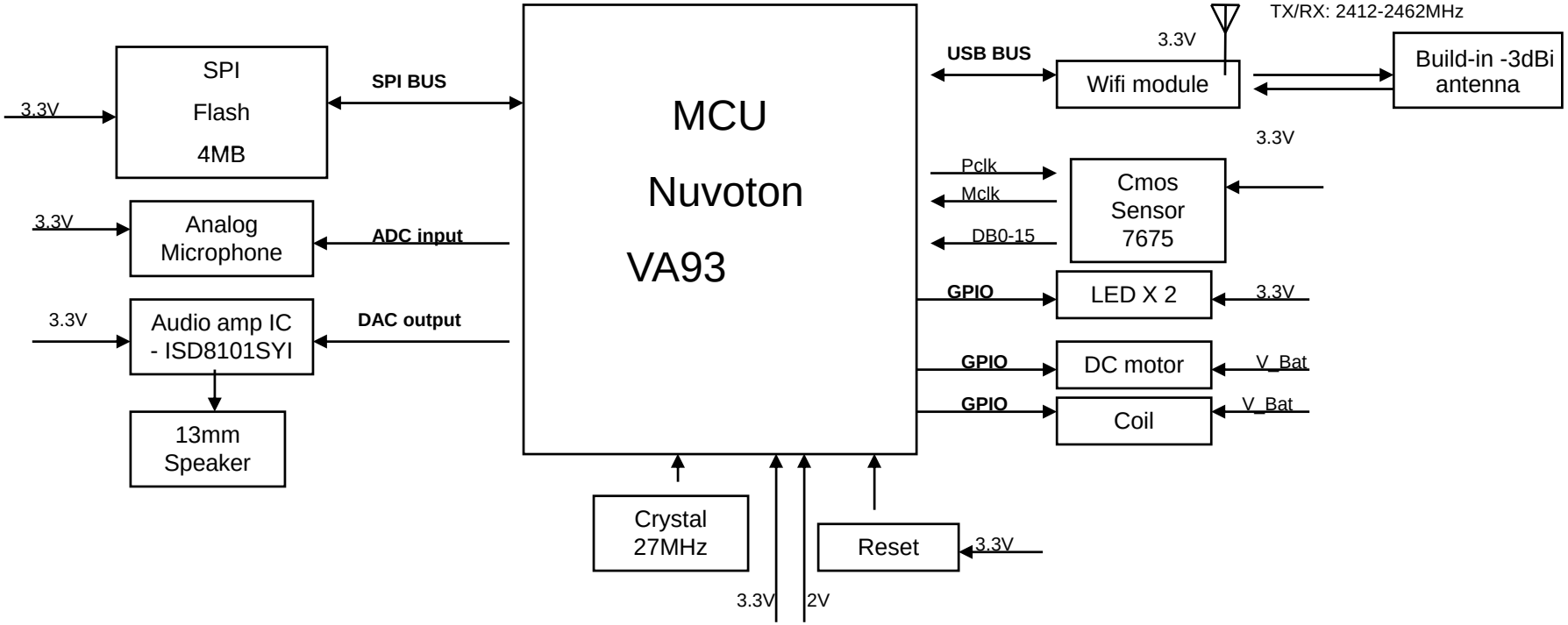
SPI
Flash
4MB
3.3V
SPI BUS
MCU
Nuvoton
VA93
3.3V
Analog
Microphone
ADC input
3.3V
Audio amp IC
- ISD8101SYI
DAC output
13mm
Speaker
Crystal
27MHz
Reset
3.3V
3.3V
2V
USB BUS
Wifi module
3.3V
TX/RX: 2412-2462MHz
Build-in -3dBi
antenna
3.3V
Pclk
Mclk
DB0-15
Cmos
Sensor
7675
GPIO
LED X 2
3.3V
GPIO
DC motor
V_Bat
GPIO
Coil
V_Bat

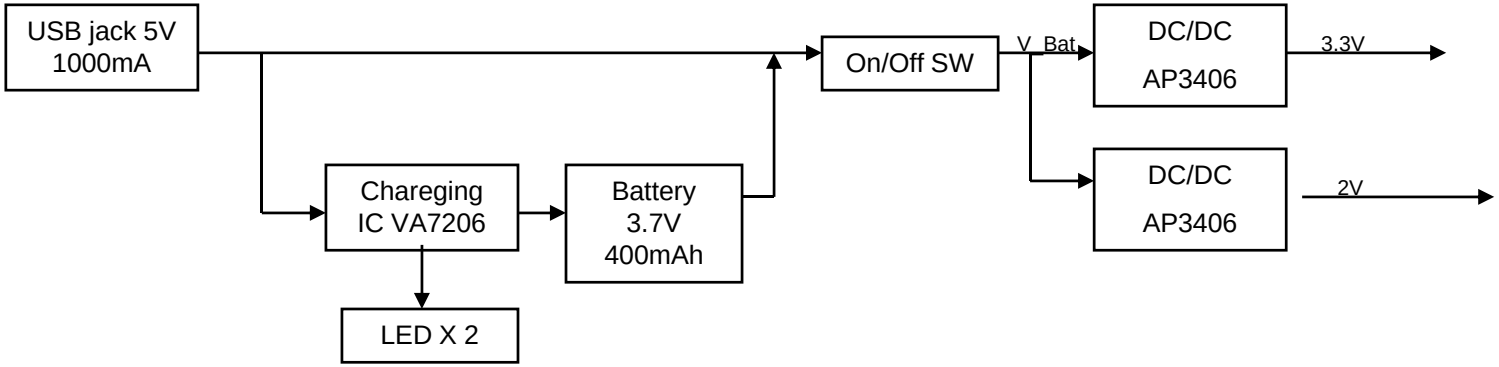
USB jack 5V
1000mA
On/Off SW
V_Bat
DC/DC
AP3406
3.3V
Chareging
IC VA7206
Battery
3.7V
400mAh
DC/DC
AP3406
2V
LED X 2