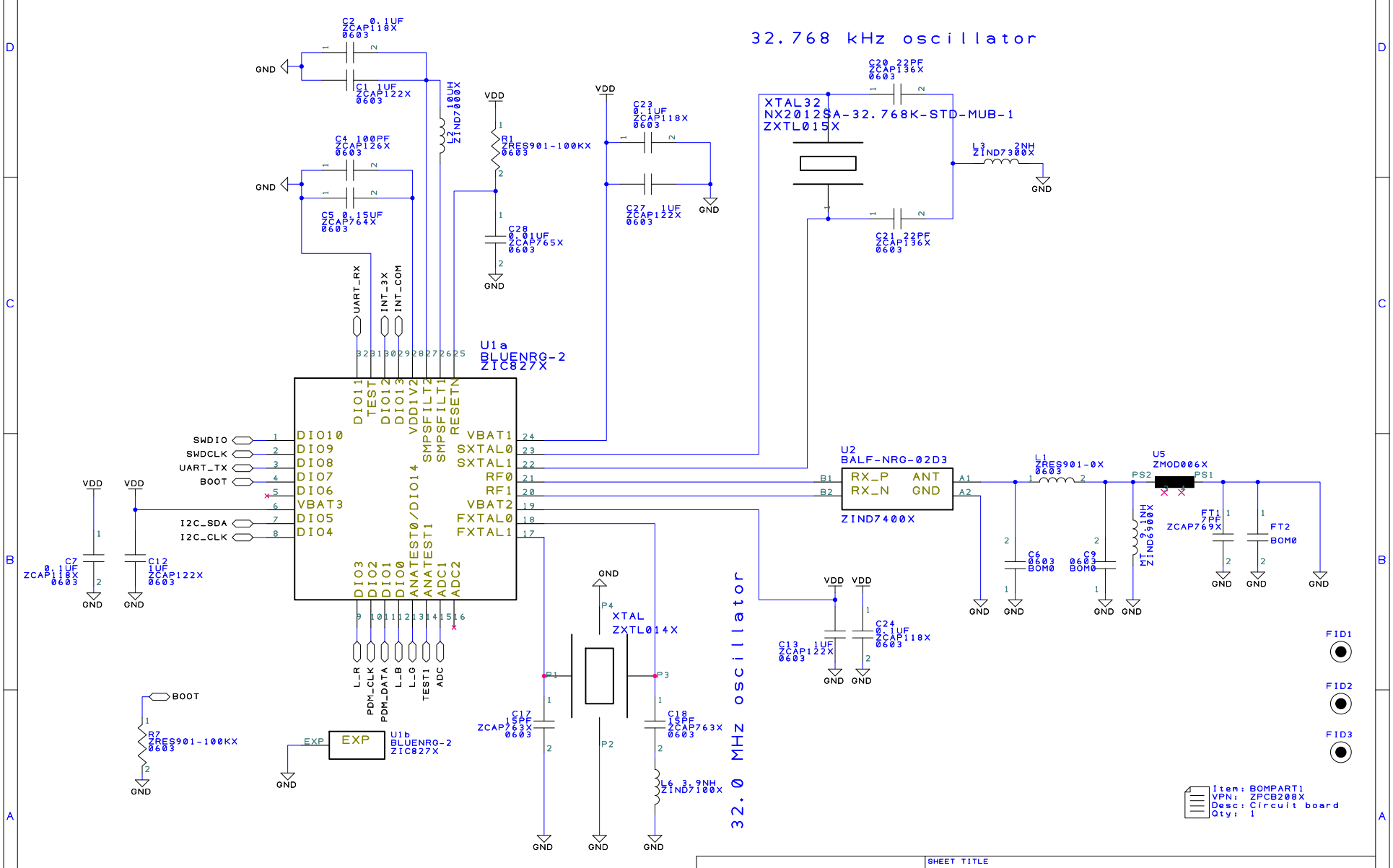

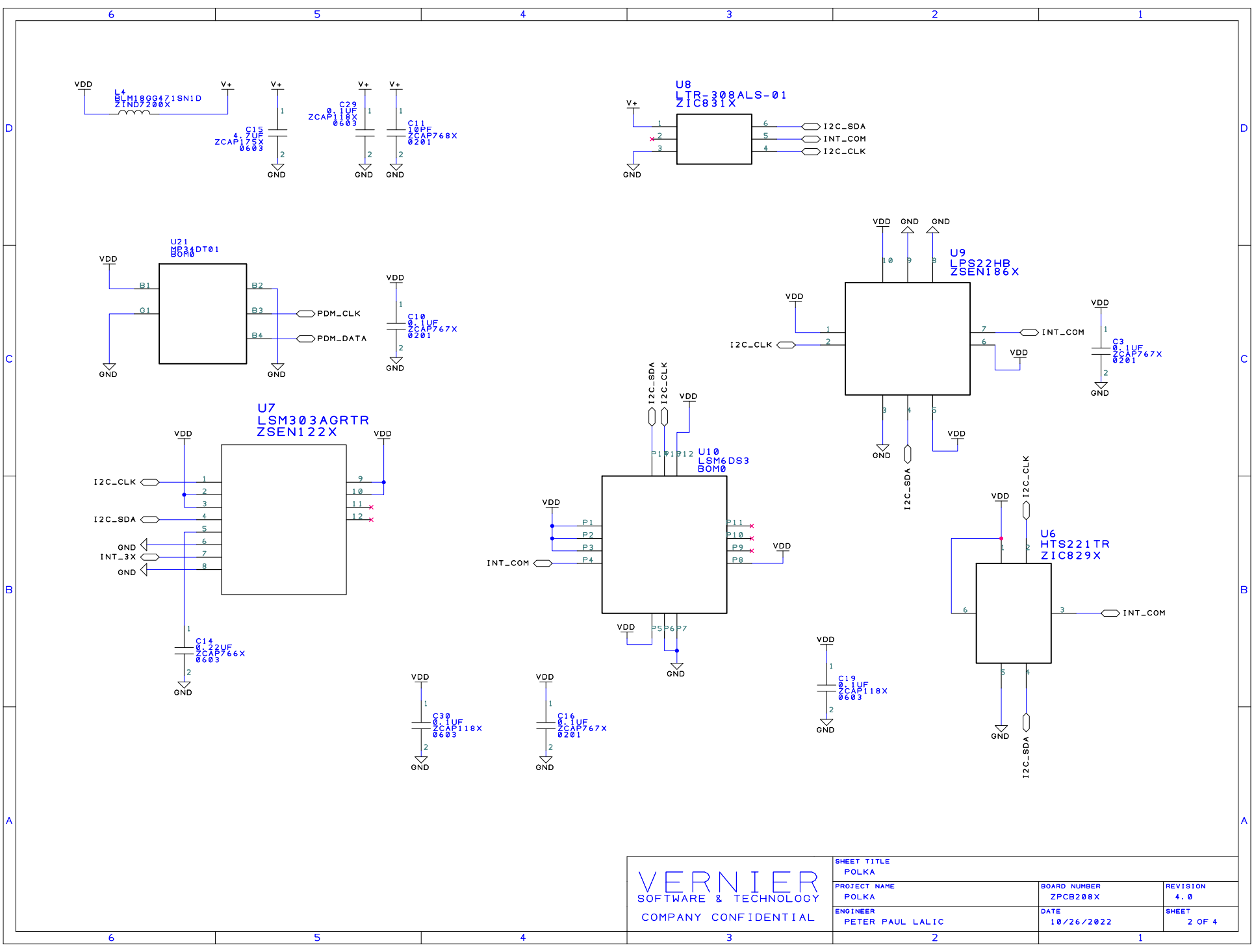

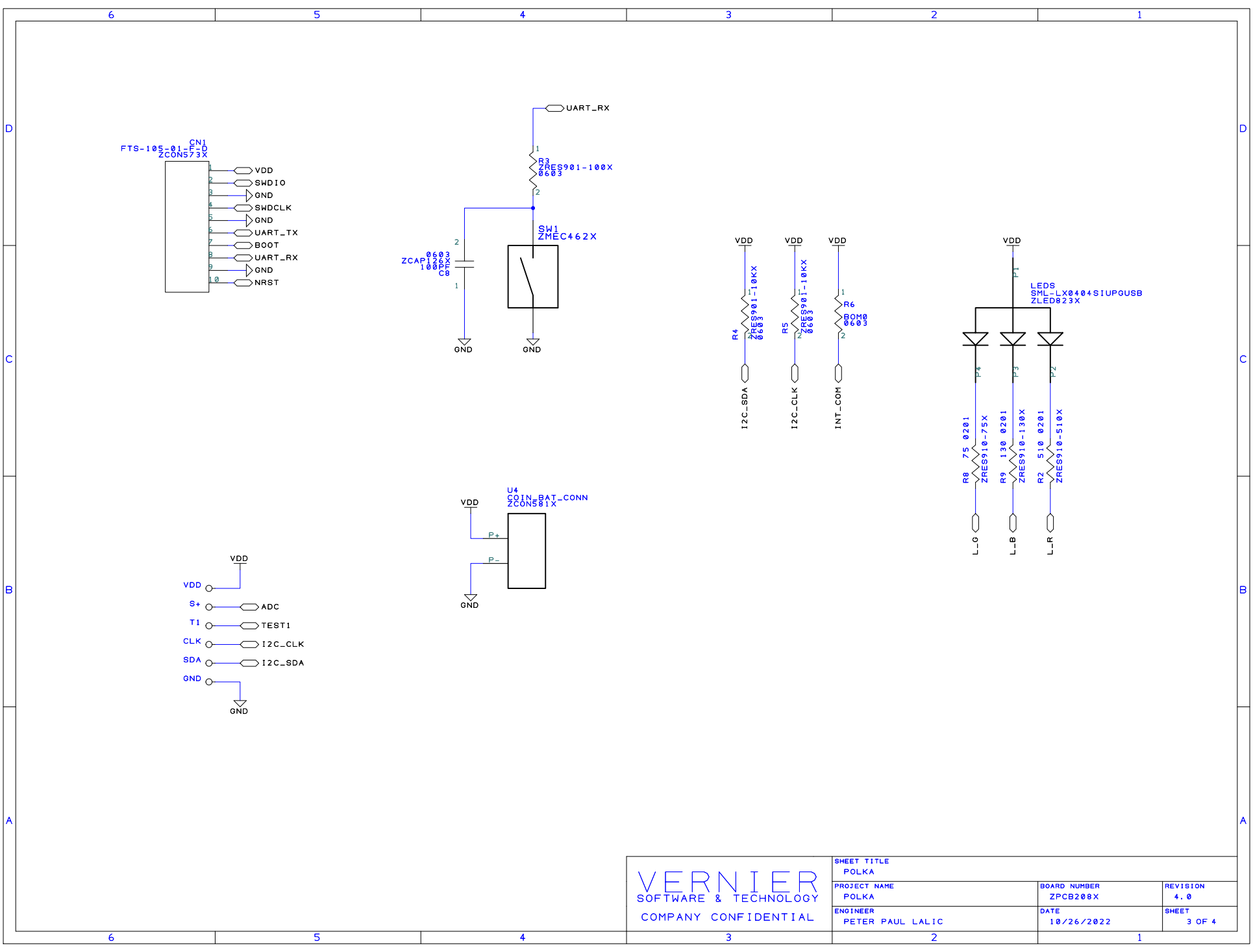

REVISIONS

REV	ENGINEER	DATE	COMMENTS
3.0	PPRL	6/22/2022	CONVERTED DESIGN FROM EAGLE TO EASYPC. RELEASED DESIGN TO BUILD PROTOBOARDS FOR EVALUATION.
4.0	PPRL	10/26/2022	CHANGED BOARD OUTLINE TO INCLUDE "KEYED FEATURES" TO HELP PLACE PCB IN CASE WITH CORRECT ORIENTATION.

VERNIER
SOFTWARE & TECHNOLOGY
COMPANY CONFIDENTIAL

SHEET TITLE		
POLKA		
PROJECT NAME: POLKA	BOARD NUMBER: ZPCB208X	REVISION: 4.0
ENGINEER: PETER PAUL LALIC	DATE: 10/26/2022	SHEET: 4 OF 4