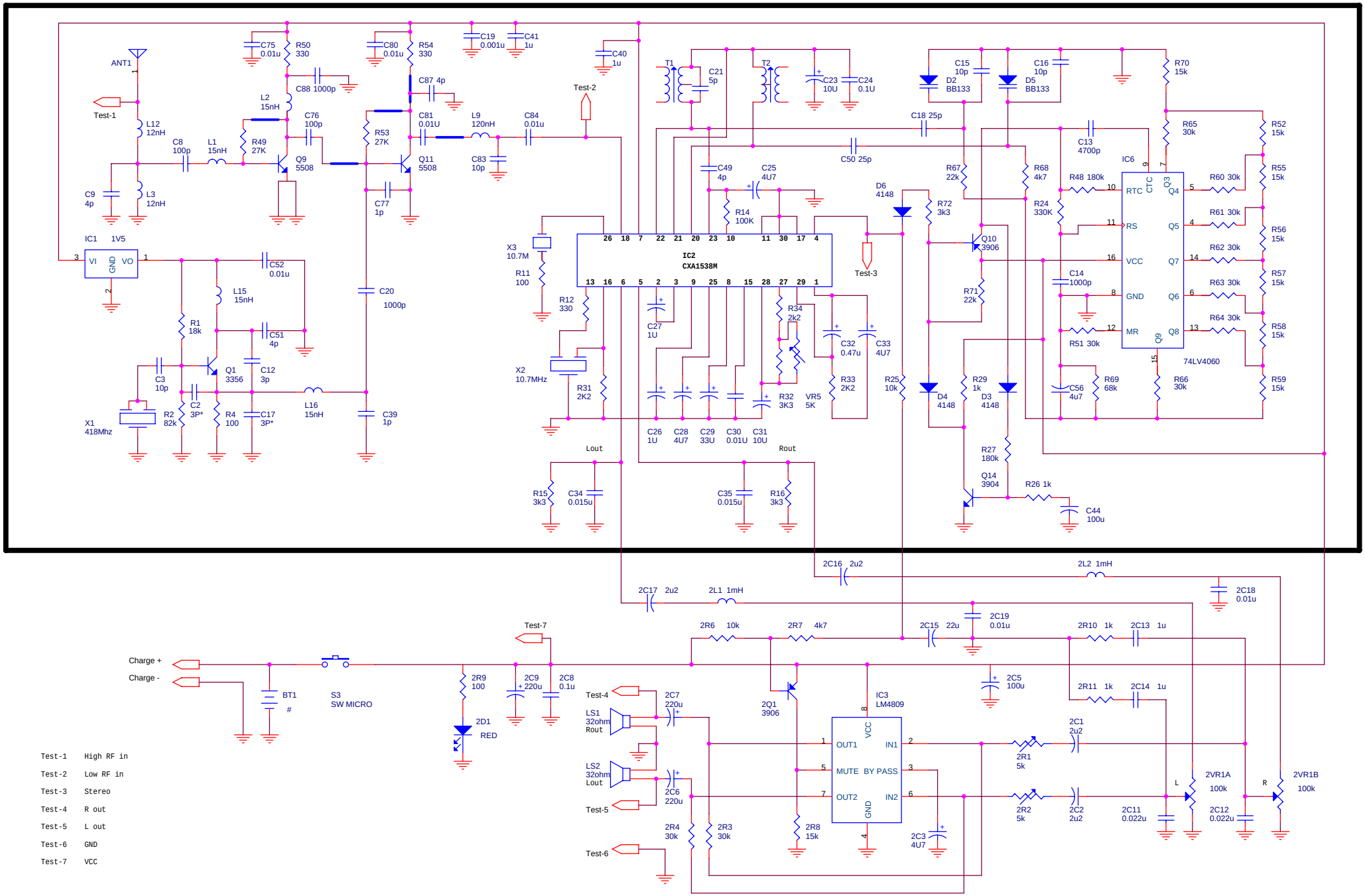

JVC 900Mhz RX

Title	JVC 900Mhz Headphone
Size A3	Document Number <Doc>
Rev	1.01
Date:	Wednesday, September 03, 2003
Sheet	1 of 1