H990S

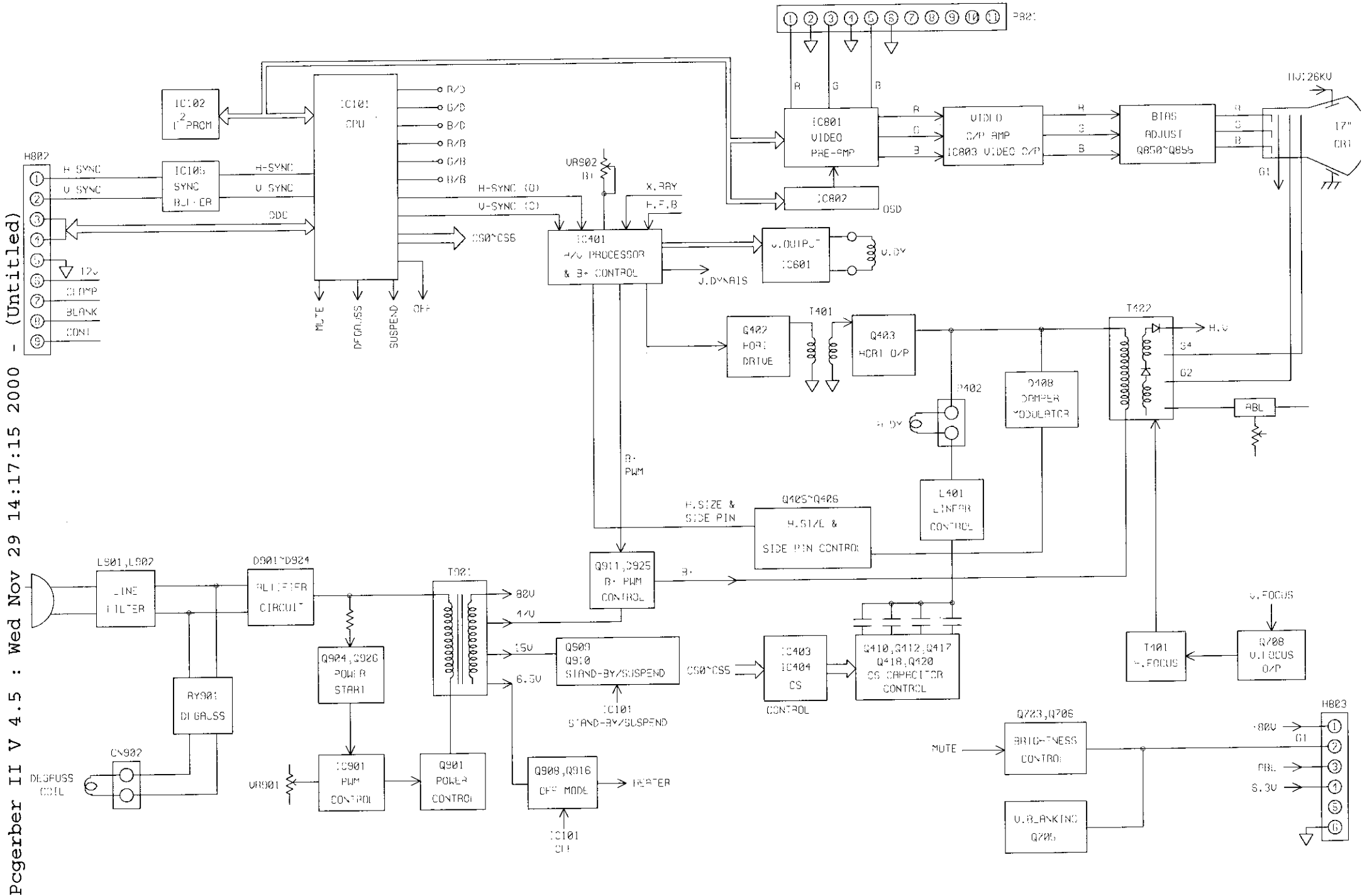
Pcgerber II V 4.5 : Wed Nov 29 14:17:15 2000 - (Untitled)
H802
H SYNC
V SYNC
DDC
12V
CLAMP
BLANK
CONT
IC102
I2PROM
IC101
CPU
IC106
SYNC
BUFFER
H-SYNC
V SYNC
R/D
G/D
B/D
R/B
G/B
B/B
H-SYNC (D)
V-SYNC (D)
CS0~CS6
MUTE
DEGAUSS
SUSPEND
OFF
VRS02
B1
X.RAY
H.F.B
IC401
H/V PROCESSOR
& B+ CONTROL
J.DYNAIS
V.OUTPUT
IC601
V.DY
P801
R
G
B
IC801
VIDEO
PRE-AMP
IC802
OSD
VIDEO
O/P AMP
IC803 VIDEO O/P
BIAS
ADJUST
Q850~Q855
HV:26KV
17"
CRT
G1
Q402
HOR
DRIVE
T401
Q403
HOR1 O/P
T422
H.V
G4
G2
ABL
P402
H.DY
Q408
DAMPER
MODULATOR
B+
PWM
H.SIZE &
SIDE PIN
Q405~Q406
H.SIZE &
SIDE PIN CONTROL
L401
LINEAR
CONTROL
L901,L902
LINE
FILTER
D901~D924
BLIPPER
CIRCUIT
T901
80V
40V
15V
6.5V
Q911,Q925
B+ PWM
CONTROL
B+
Q904,Q926
POWER
START
Q909
Q910
STAND-BY/SUSPEND
IC101
STAND-BY/SUSPEND
CS0~CS5
IC403
IC404
CS
CONTROL
Q410,Q412,Q417
Q418,Q420
CS CAPACITOR
CONTROL
V.FOCUS
T101
H.FOCUS
Q708
V.FOCUS
O/P
RY901
DEGAUSS
CN902
DEGAUSS
COIL
VR901
IC901
PWM
CONTROL
Q901
POWER
CONTROL
Q908,Q916
OFF MODE
HEATER
IC101
OFF
Q723,Q706
BRIGHTNESS
CONTROL
MUTE
V.BLANKING
Q705
H803
-80V
G1
ABL
6.3V