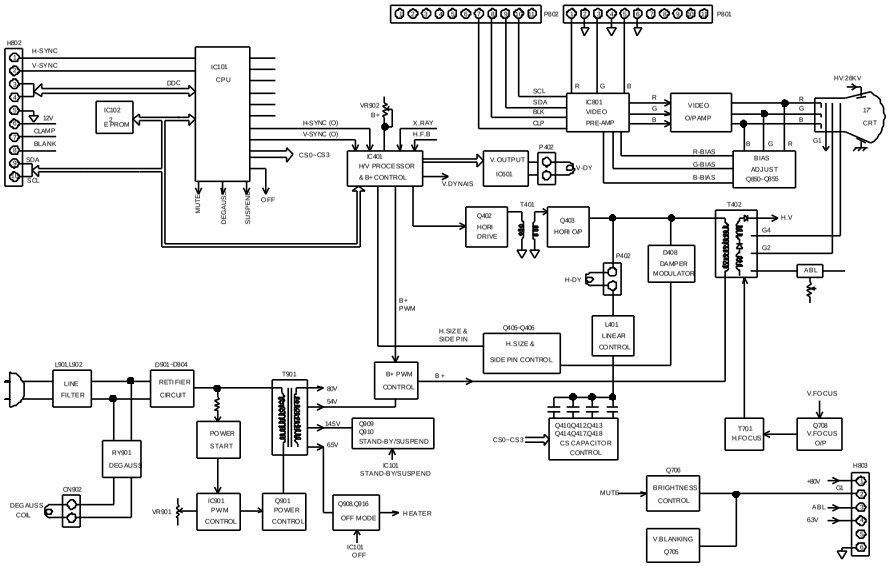
P802
P801
H802
H-SYNC
V-SYNC
DDC
12V
CLAMP
BLANK
SDA
SCL
IC302
E2PROM
IC101
CPU
MUTE
DEGAUSS
SUSPEND
OFF
H-SYNC (O)
V-SYNC (O)
CS0~CS3
VR902
B+
X-RAY
H.F.B
IC401
HV PROCESSOR
& B+ CONTROL
V.DYNAMIS
V.OUTPUT
IC501
P402
V-DY
SCL
SDA
BLK
CLP
IC801
VIDEO
PRE-AMP
R
G
B
VIDEO
OPAMP
R-BIAS
G-BIAS
B-BIAS
BIAS
ADJUST
Q850~Q855
HV:26KV
17"
CRT
G1
Q402
HORI
DRIVE
T401
Q403
HORI OP
T402
H.V
G4
G2
ABL
P402
H-DY
D408
DAMPER
MODULATOR
B+
PWM
H.SIZE &
SIDE PIN
Q405~Q406
H.SIZE &
SIDE PIN CONTROL
L401
LINEAR
CONTROL
L901,L902
LINE
FILTER
D901~D904
RECTIFIER
CIRCUIT
T901
B+ PWM
CONTROL
B+
80V
54V
145V
65V
POWER
START
Q409
Q910
STAND-BY/SUSPEND
IC101
STAND-BY/SUSPEND
C410,Q412,Q413
Q414,Q417,Q418
CS CAPACITOR
CONTROL
CS0~CS3
V.FOCUS
T701
H.FOCUS
Q708
V.FOCUS
OP
RY901
DEGAUSS
CN902
DEGAUSS
COIL
VR901
IC801
PWM
CONTROL
Q901
POWER
CONTROL
Q908,Q916
OFF MODE
HEATER
IC101
OFF
Q706
BRIGHTNESS
CONTROL
MUTE
V.BLANKING
Q705
H803
+80V
G1
ABL
6.3V