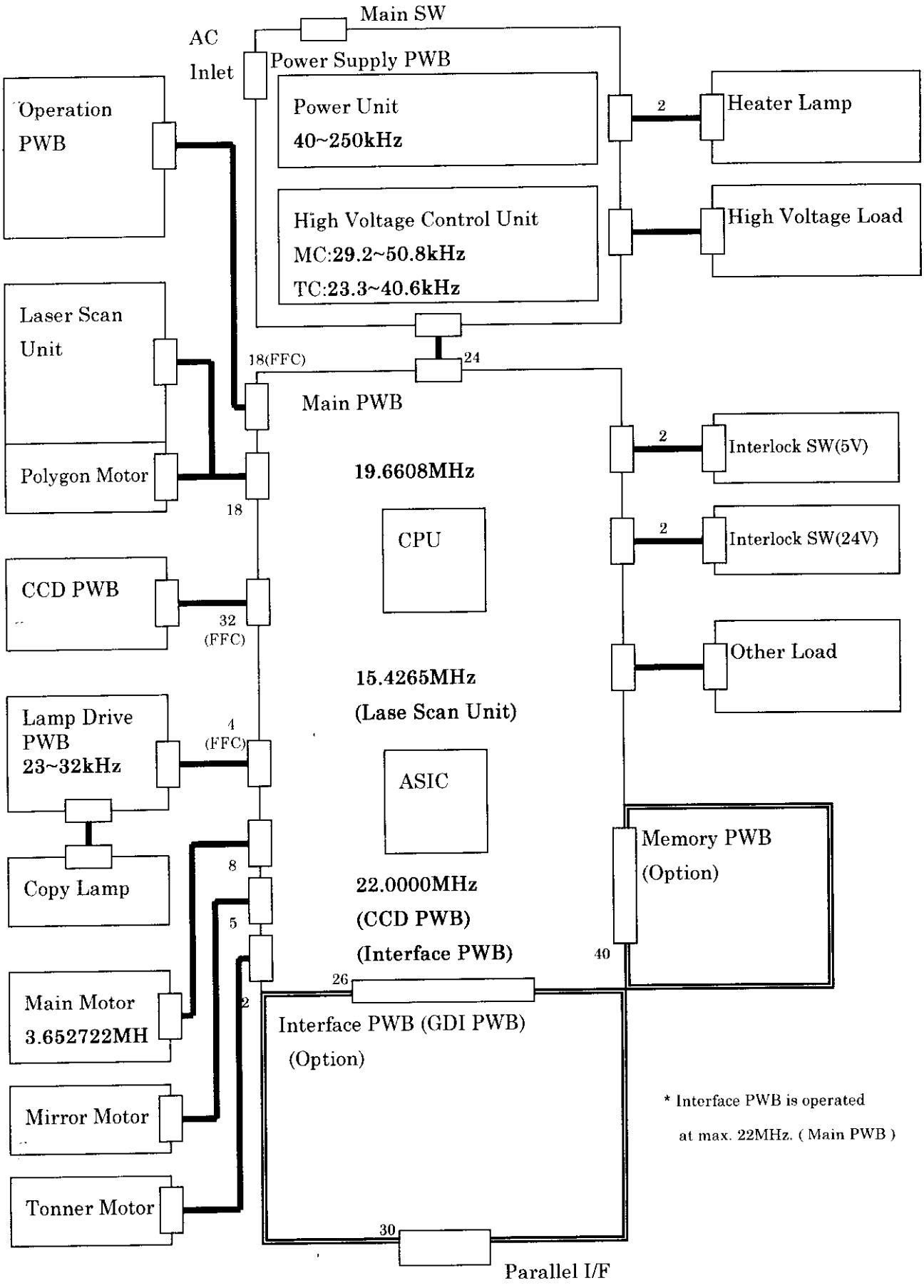Digital Copier AR-Z300 Series BLOCK DIAGRAM