MODEL R-8000G
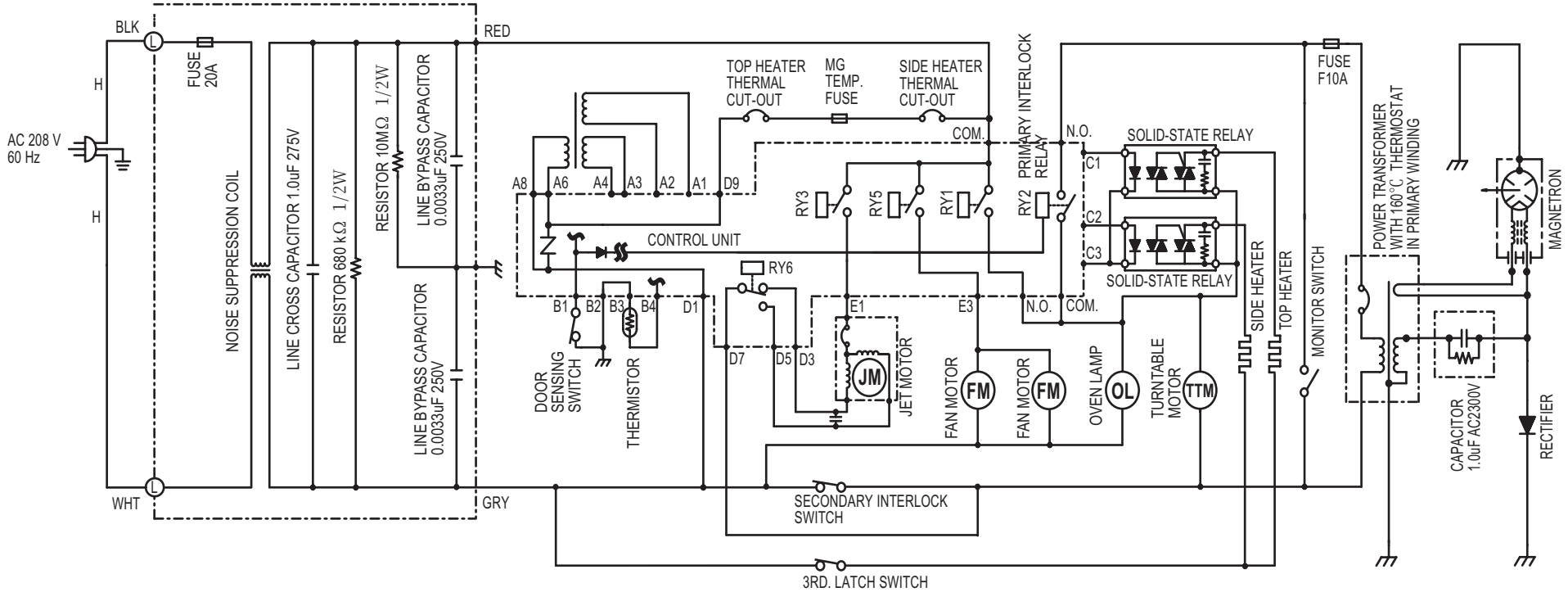
SCHEMATIC DIAGRAM (DOOR CLOSED, COOK OFF CONDITION)