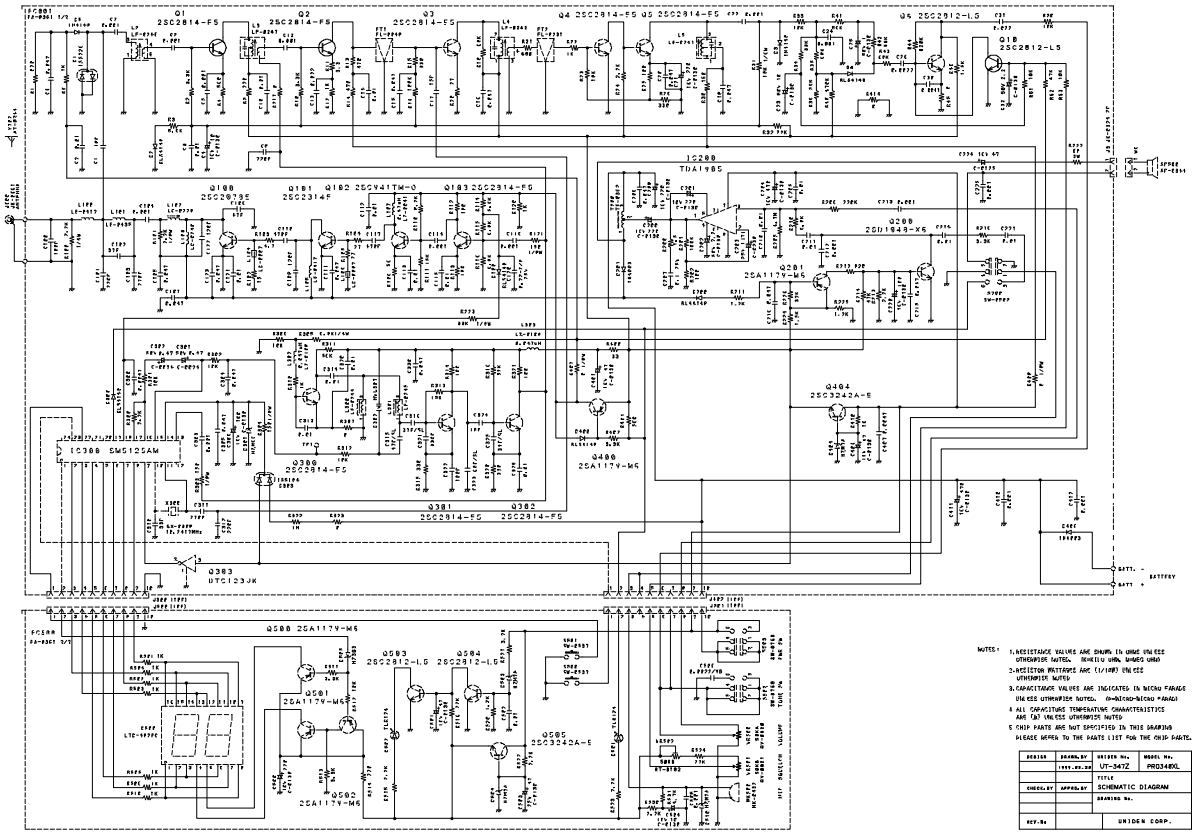

NOTES:

1. RESISTANCE VALUES ARE SHOWN IN OHMS UNLESS OTHERWISE NOTED. KOHMS=1000 OHMS
2. RESISTOR WATTAGES ARE (1/10W) UNLESS OTHERWISE NOTED
3. CAPACITANCE VALUES ARE INDICATED IN MICRO FARADS UNLESS OTHERWISE NOTED. P=PICRO-PICRO FARADS
4. ALL CAPACITORS TEMPERATURE CHARACTERISTICS ARE (B) UNLESS OTHERWISE NOTED
5. CHIP PARTS ARE NOT SPECIFIED IN THIS DRAWING PLEASE REFER TO THE PARTS LIST FOR THE CHIP PARTS.

DESIGN	DRAWN BY	UNIDEN No.	MODEL No.
	1999.09.20	UT-347Z	PRO348XL
		TITLE	
CHECK BY	APPRO BY	SCHEMATIC DIAGRAM	
		DRAWING No.	
REV-No		UNIDEN CORP.	