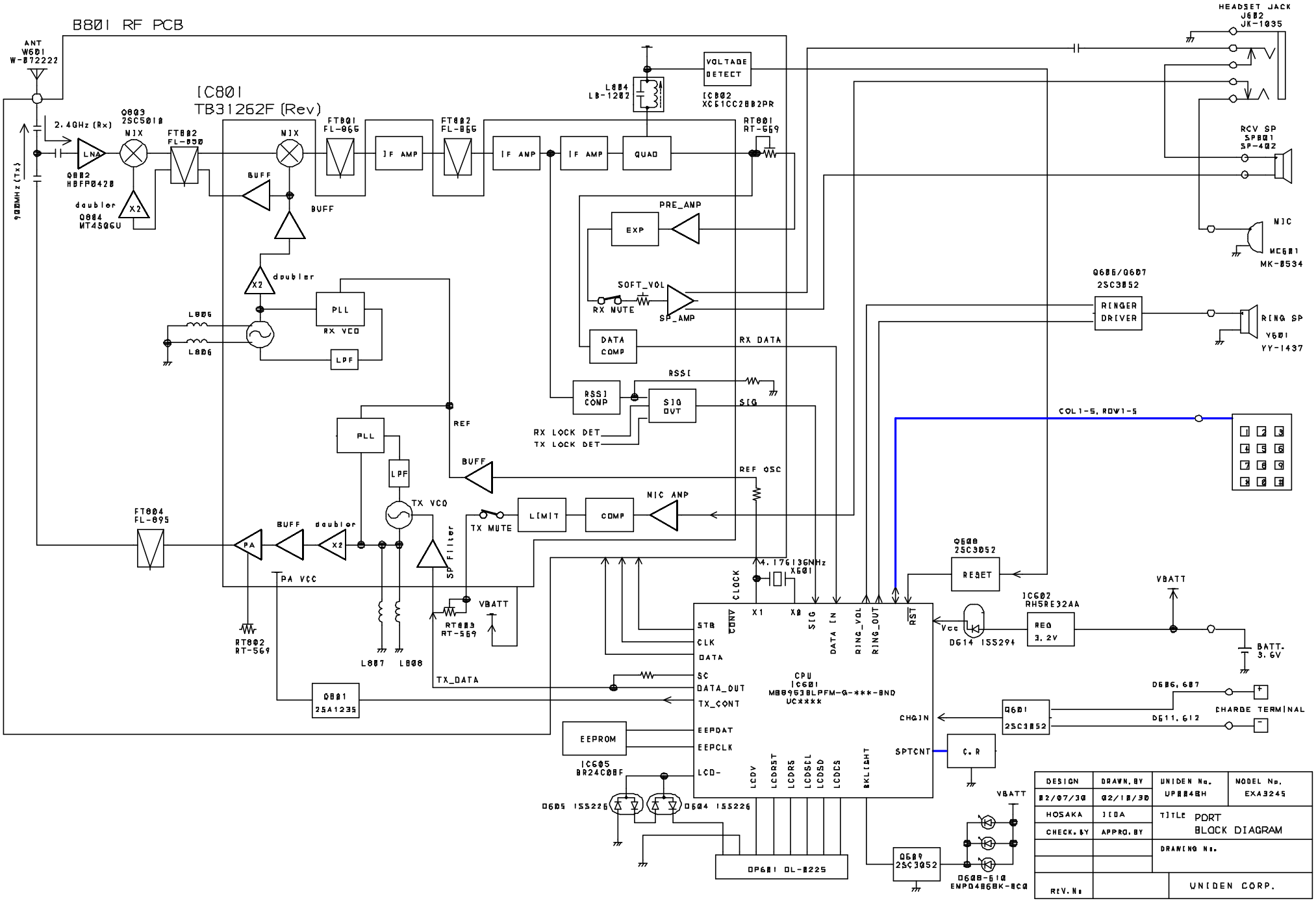

DESIGN	DRAWN. BY	UNIDEN No.	MODEL No.
02/07/30	02/10/30	UP0048H	EXA3245
HOSAKA	IIDA	TITLE PORT BLOCK DIAGRAM	
CHECK. BY	APPRO. BY		
		DRAWING No.	
REV. No		UNIDEN CORP.	