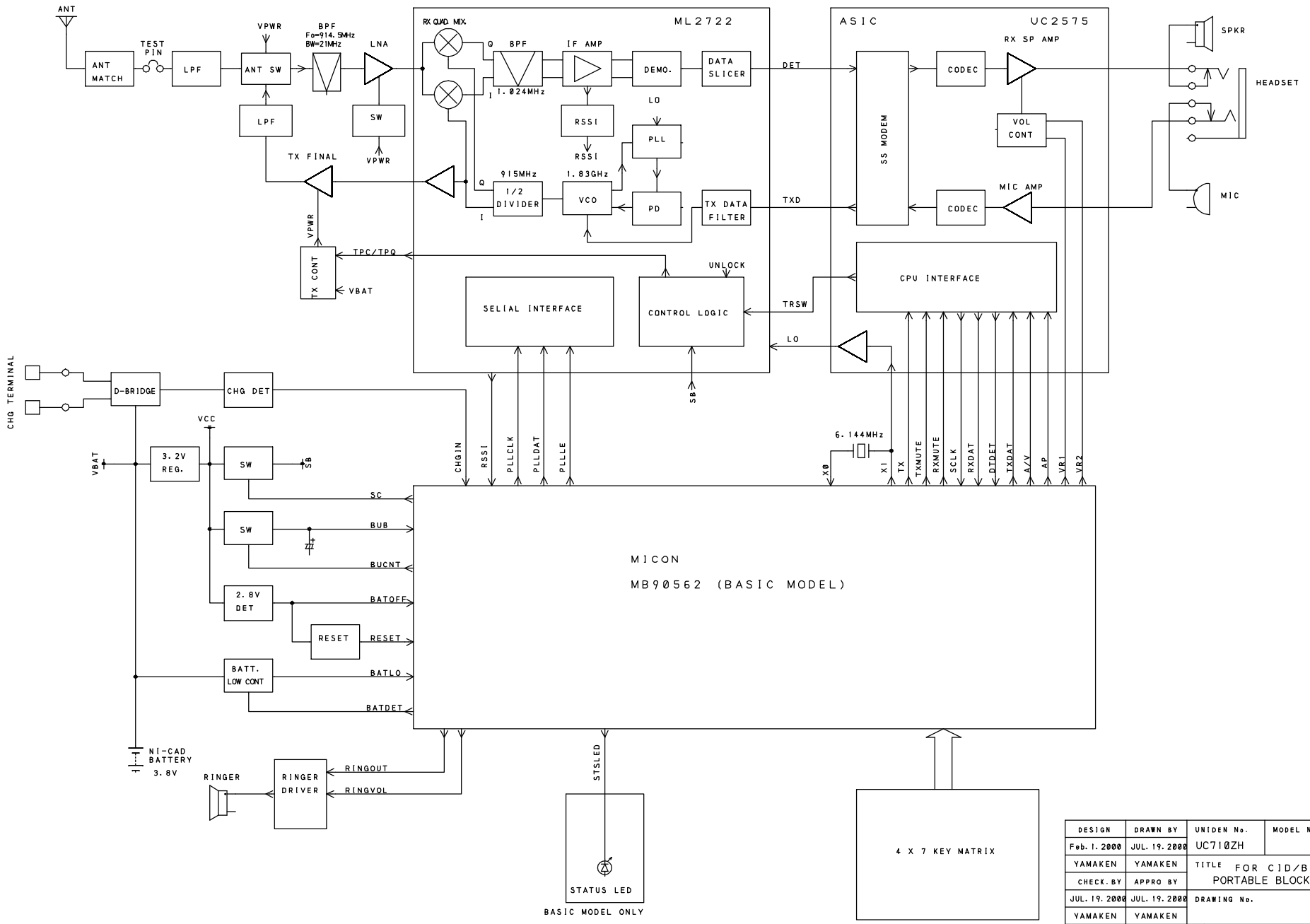

DESIGN	DRAWN BY	UNIDEN No.	MODEL No.
Feb. 1. 2000	JUL. 19. 2000	UC710ZH	
YAMAKEN	YAMAKEN	TITLE FOR CID/BASIC PORTABLE BLOCK DIA	
CHECK. BY	APPRO BY		
JUL. 19. 2000	JUL. 19. 2000	DRAWING No.	
YAMAKEN	YAMAKEN		
REV. No		UNIDEN CORP.	