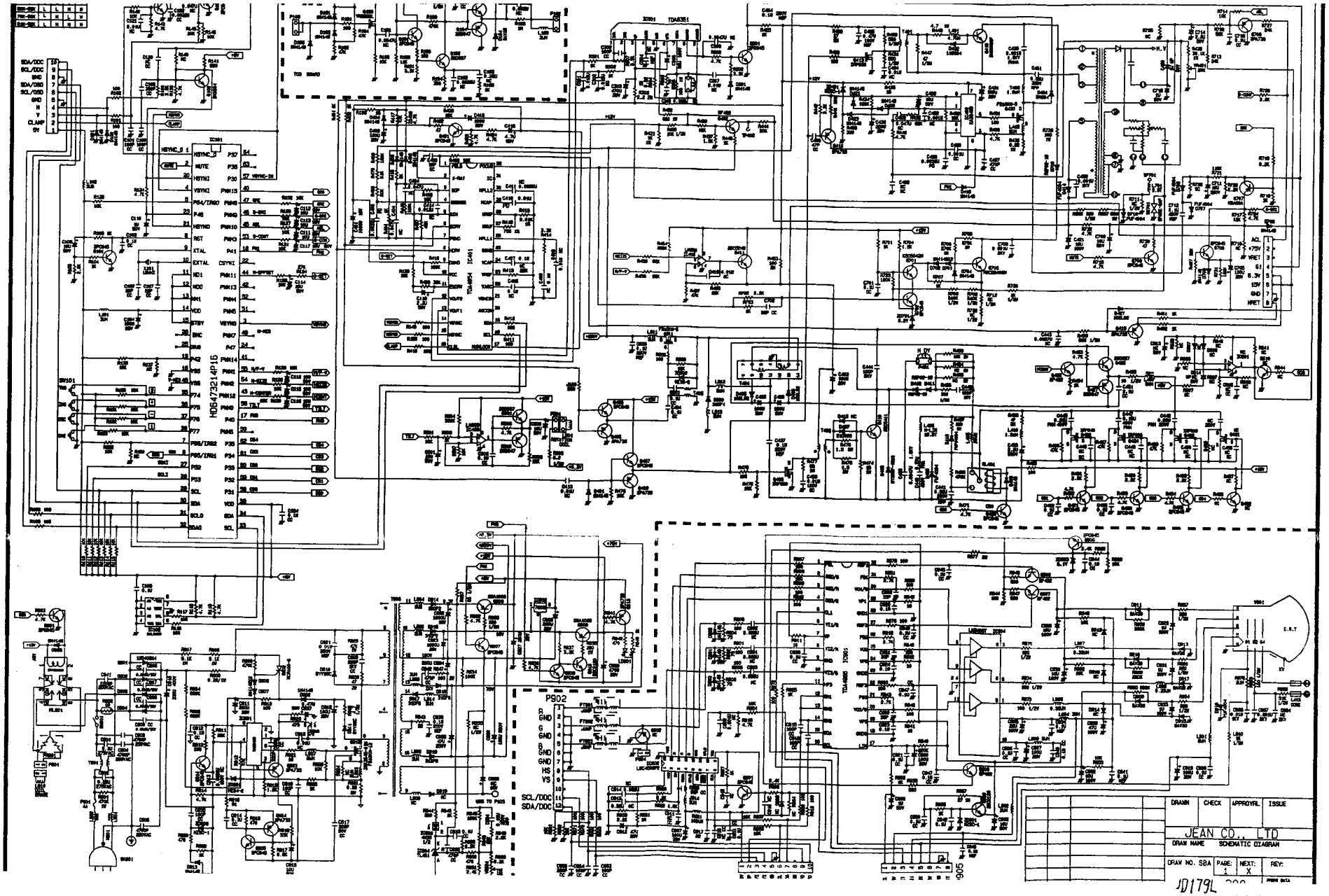

JD179L

J71D

FCC ID: AMPJ71D