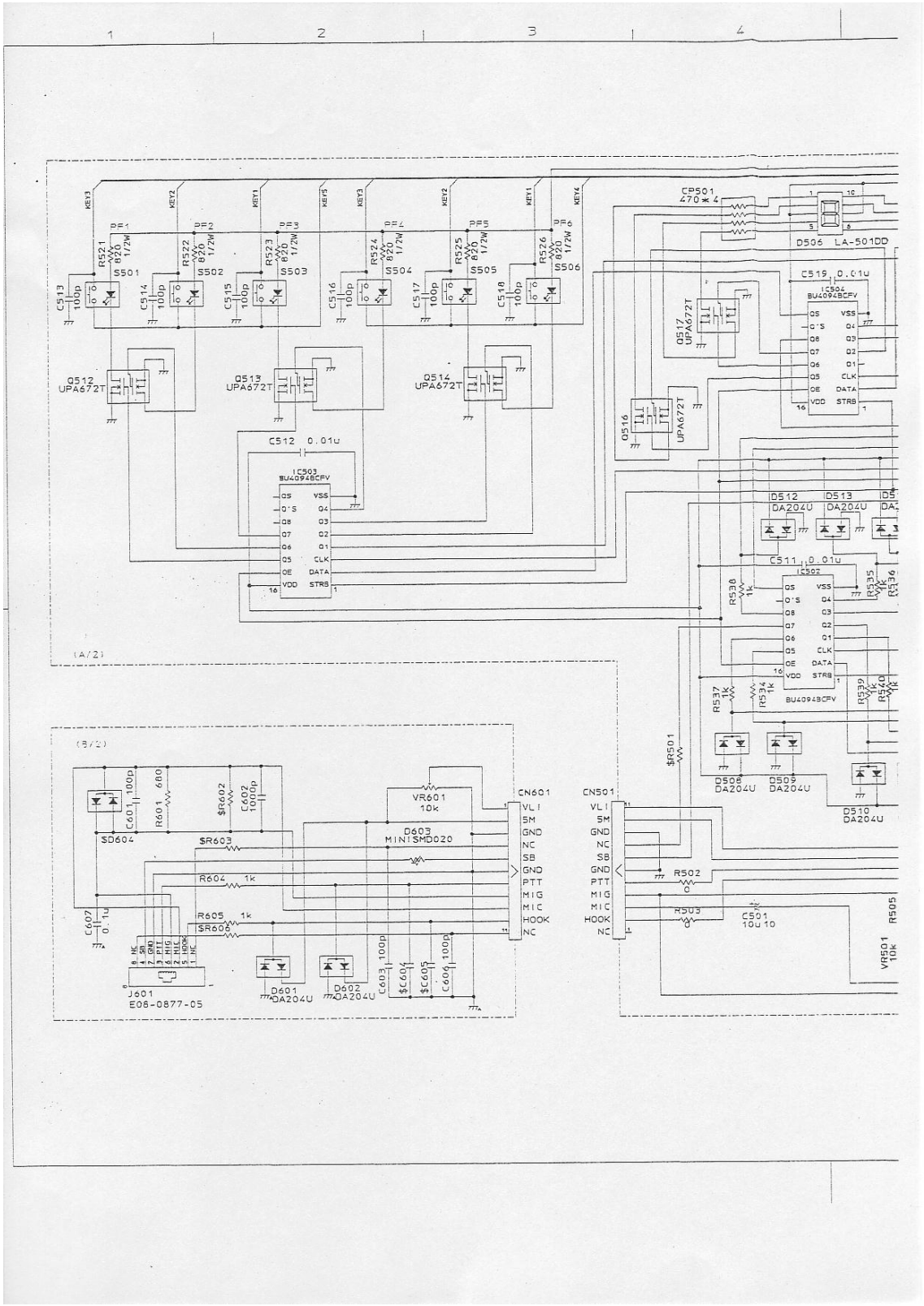

FCC ID : ALH31103120

MODEL NAME : TKR-750K2

CIRCUIT SCHEMATIC:

DISPLAY Unit (Left)