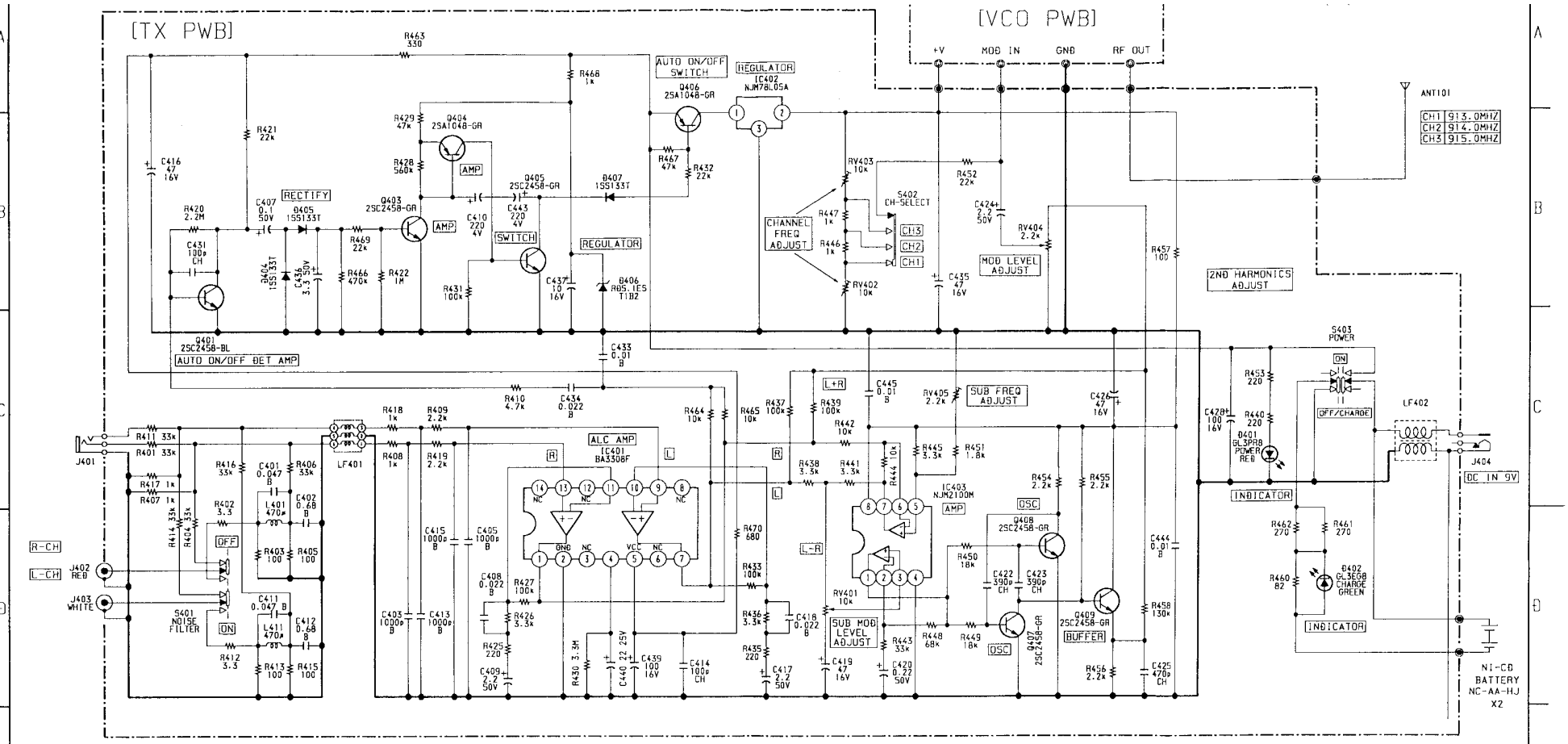

UNIT mm	TOLERANCE	USED ON MDR-RF950RK (U2) MDR-RF950RK (CA2)	RANK	
ANGLE			FAMILY	
SCALE 1 : 1		ORIGINAL MODEL MDR-RF950RK (U2)		
MATERIAL (COLOR)		FINISH (COLOR)		

DESCRIPTION

(E) SCHEMATIC DIAGRAM <TX PWB>

(J) TX基板 回路図

HISTORY	SUFFIX	ECN-NO.	REVISION	SIGN.
X COUNT	REPL.	DATE		

DRAWN BY	PLANNED BY	CHECKED BY	APPROVED BY	TENTATIVE	MODEL	PART NO.	SHEET
PAV GA3-1 98.4.20					HDX-1442	C-	1/1

THIS DOCUMENT IS THE PROPRIETARY PROPERTY OF SONY. ITS USE IS AUTHORIZED ONLY FOR RESPONDING TO A REQUEST FOR QUOTATION OR FOR THE PERFORMANCE OF WORK FOR SONY. ALL QUESTIONS MUST BE REFERRED TO THE LOCAL PURCHASING DEPARTMENT OF SONY.

A3

ISSUED

MODEL ●930840 B-¥MDR-RF950-TX-BASE-03. VS=1 98.05.28 10:30

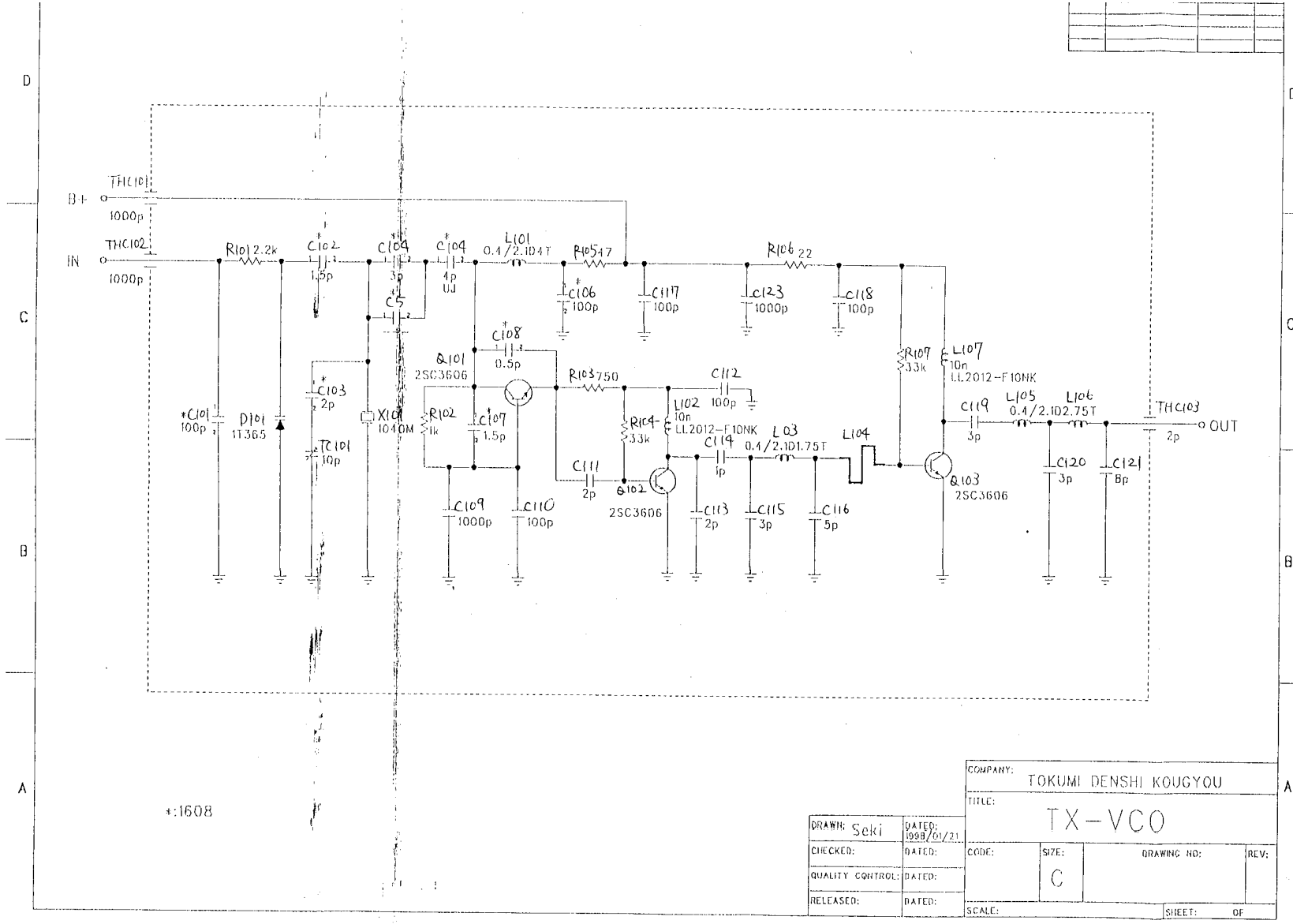

DRAWN: Seki	DATED: 1998/01/21	COMPANY: TOKUMI DENSHI KOUGYOU	
CHECKED:	DATED:	TITLE: TX-VCO	
QUALITY CONTROL:	DATED:	CODE:	SIZE: C
RELEASED:	DATED:	DRAWING NO:	REV:
		SCALE:	SHEET: OF

TMR-RF950R

VCO MODULE