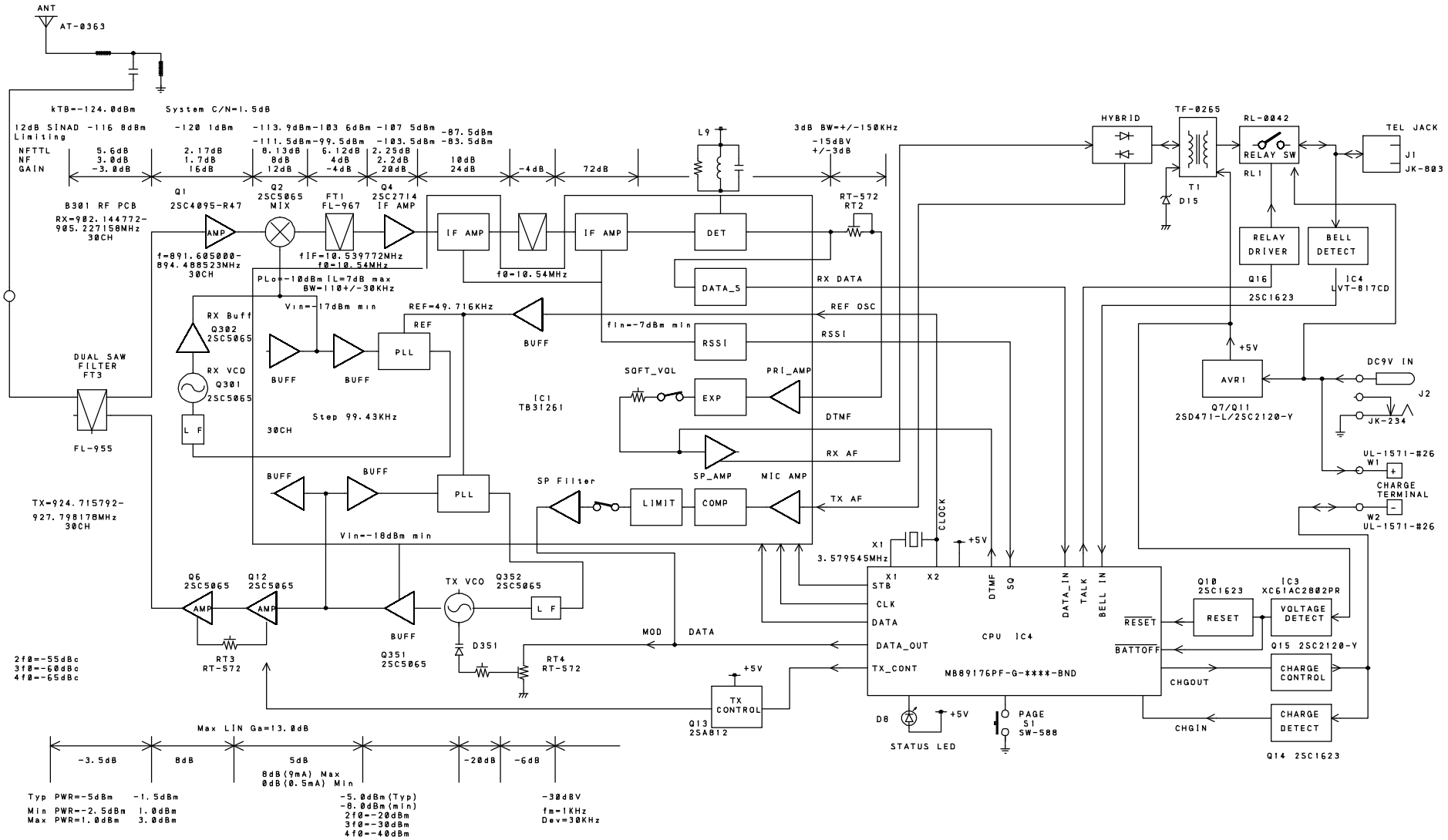

DESIGN	DRAWN.BY	UNIDEN No.	MODEL No.
	00.02.15	UC283ZH	EXP7900
	SUWA	TITLE BASE	
CHECK.BY	APPRO.BY	BLOCK DIAGRAM	
		DRAWING No.	
REV.No		UNIDEN CORP.	