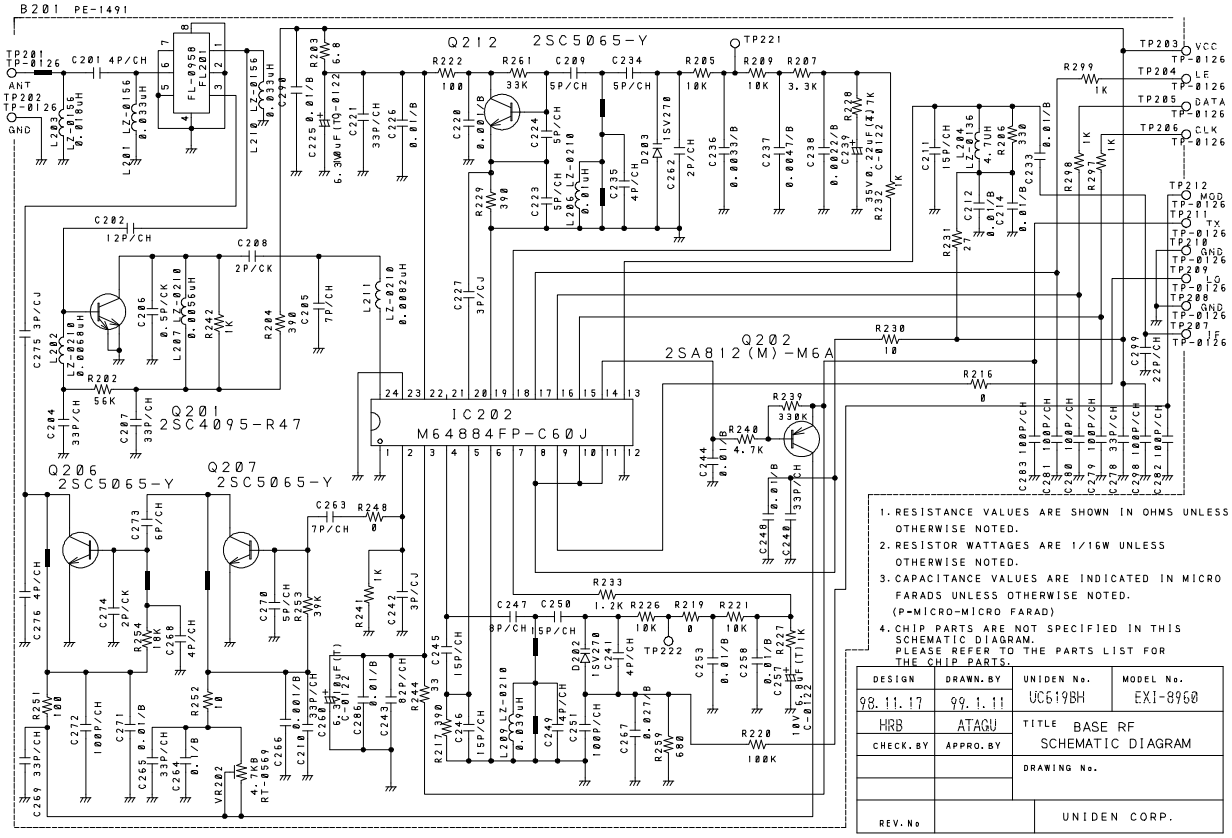

1. RESISTANCE VALUES ARE SHOWN IN OHMS UNLESS OTHERWISE NOTED.
2. RESISTOR WATTAGES ARE 1/16W UNLESS OTHERWISE NOTED.
3. CAPACITANCE VALUES ARE INDICATED IN MICRO FARADS UNLESS OTHERWISE NOTED. (P-MICRO-MICRO FARAD)
4. CHIP PARTS ARE NOT SPECIFIED IN THIS SCHEMATIC DIAGRAM. PLEASE REFER TO THE PARTS LIST FOR THE CHIP PARTS.

DESIGN	DRAWN. BY	UNIDEN No.	MODEL No.
98.11.17	99.1.11	UC619BH	EXI-8950
HRB	ATAGU	TITLE BASE RF	
CHECK. BY	APPRO. BY	SCHEMATIC DIAGRAM	
		DRAWING No.	
REV. No		UNIDEN CORP.	