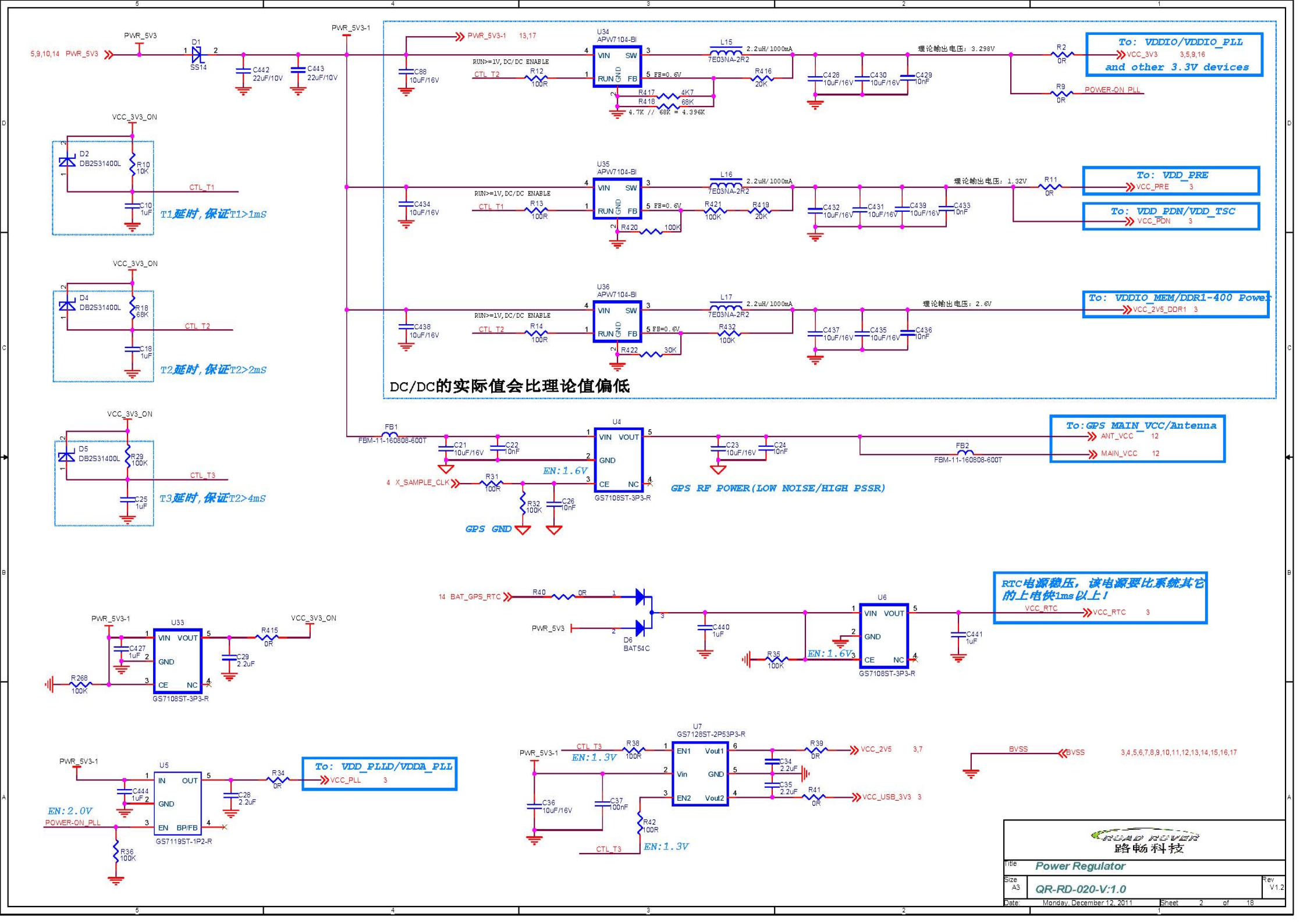
PWR_5V3
5,9,10,14 PWR_5V3
D1
SS14
C442 22uF/10V
C443 22uF/10V
PWR_5V3-1
PWR_5V3-1 13,17
U34
APW7104-BI
VIN SW
RUN GND FB
RUN>=1V, DC/DC ENABLE
CTL_T2
R12 100R
C88 10uF/16V
L15 2.2uH/1000mA
7E03NA-2R2
FB=0.6V
R416 20K
R417 4K7
R418 68K
4.7K // 68K = 4.396K
C428 10uF/16V
C430 10uF/16V
C429 10nF
理论输出电压：3.298V
R2 0R
R9 0R
To: VDDIO/VDDIO_PLL
VCC_3V3 3,5,9,16
and other 3.3V devices
POWER-ON_PLL
U35
APW7104-BI
RUN>=1V, DC/DC ENABLE
CTL_T1
R13 100R
C434 10uF/16V
L16 2.2uH/1000mA
7E03NA-2R2
R421 100K
R419 20K
R420 100K
C432 10uF/16V
C431 10uF/16V
C439 10uF/16V
C433 10nF
理论输出电压：1.32V
R11 0R
To: VDD_PRE
VCC_PRE 3
To: VDD_PDN/VDD_TSC
VCC_PDN 3
U36
APW7104-BI
RUN>=1V, DC/DC ENABLE
CTL_T2
R14 100R
C438 10uF/16V
L17 2.2uH/1000mA
7E03NA-2R2
R432 100K
R422 30K
C437 10uF/16V
C435 10uF/16V
C436 10nF
理论输出电压：2.6V
To: VDDIO_MEM/DDR1-400 Power
VCC_2V5_DDR1 3
DC/DC的实际值会比理论值偏低
VCC_3V3_ON
D2
DB2S31400L
R10 10K
CTL_T1
C10 1uF
T1延时，保证T1>1mS
D4
DB2S31400L
R18 68K
CTL_T2
C18 1uF
T2延时，保证T2>2mS
D5
DB2S31400L
R29 100K
CTL_T3
C25 1uF
T3延时，保证T2>4mS
FB1
FBM-11-160808-600T
C21 10uF/16V
C22 10nF
U4
VIN VOUT
GND
CE NC
GS7108ST-3P3-R
EN:1.6V
4 X_SAMPLE_CLK
R31 100R
R32 100K
C26 10nF
GPS GND
C23 10uF/16V
C24 10nF
GPS RF POWER(LOW NOISE/HIGH PSSR)
FB2
FBM-11-160808-600T
To:GPS MAIN_VCC/Antenna
ANT_VCC 12
MAIN_VCC 12
PWR_5V3-1
U33
VIN VOUT
GND
CE NC
GS7108ST-3P3-R
C427 1uF
R268 100K
R415 0R
C29 2.2uF
VCC_3V3_ON
14 BAT_GPS_RTC
R40 0R
PWR_5V3
D6
BAT54C
C440 1uF
U6
VIN VOUT
GND
CE NC
GS7108ST-3P3-R
R35 100K
EN:1.6V
C441 1uF
RTC电源稳压，该电源要比系统其它的上电快1ms以上！
VCC_RTC
VCC_RTC 3
PWR_5V3-1
U5
IN OUT
GND
EN BP/FB
GS7119ST-1P2-R
C444 1uF
C28 2.2uF
R34 0R
To: VDD_PLLD/VDDA_PLL
VCC_PLL 3
EN:2.0V
POWER-ON_PLL
R36 100K
U7
GS7128ST-2P53P3-R
EN1 Vout1
Vin GND
EN2 Vout2
PWR_5V3-1
CTL_T3
EN:1.3V
R38 100R
R39 0R
VCC_2V5 3,7
C34 2.2uF
C35 2.2uF
R41 0R
VCC_USB_3V3 3
C36 10uF/16V
C37 100nF
R42 100R
CTL_T3
EN:1.3V
BVSS
BVSS 3,4,5,6,7,8,9,10,11,12,13,14,15,16,17
路畅科技
Title Power Regulator
Size A3
QR-RD-020-V:1.0
Rev V1.2
Date: Monday, December 12, 2011
Sheet 2 of 18

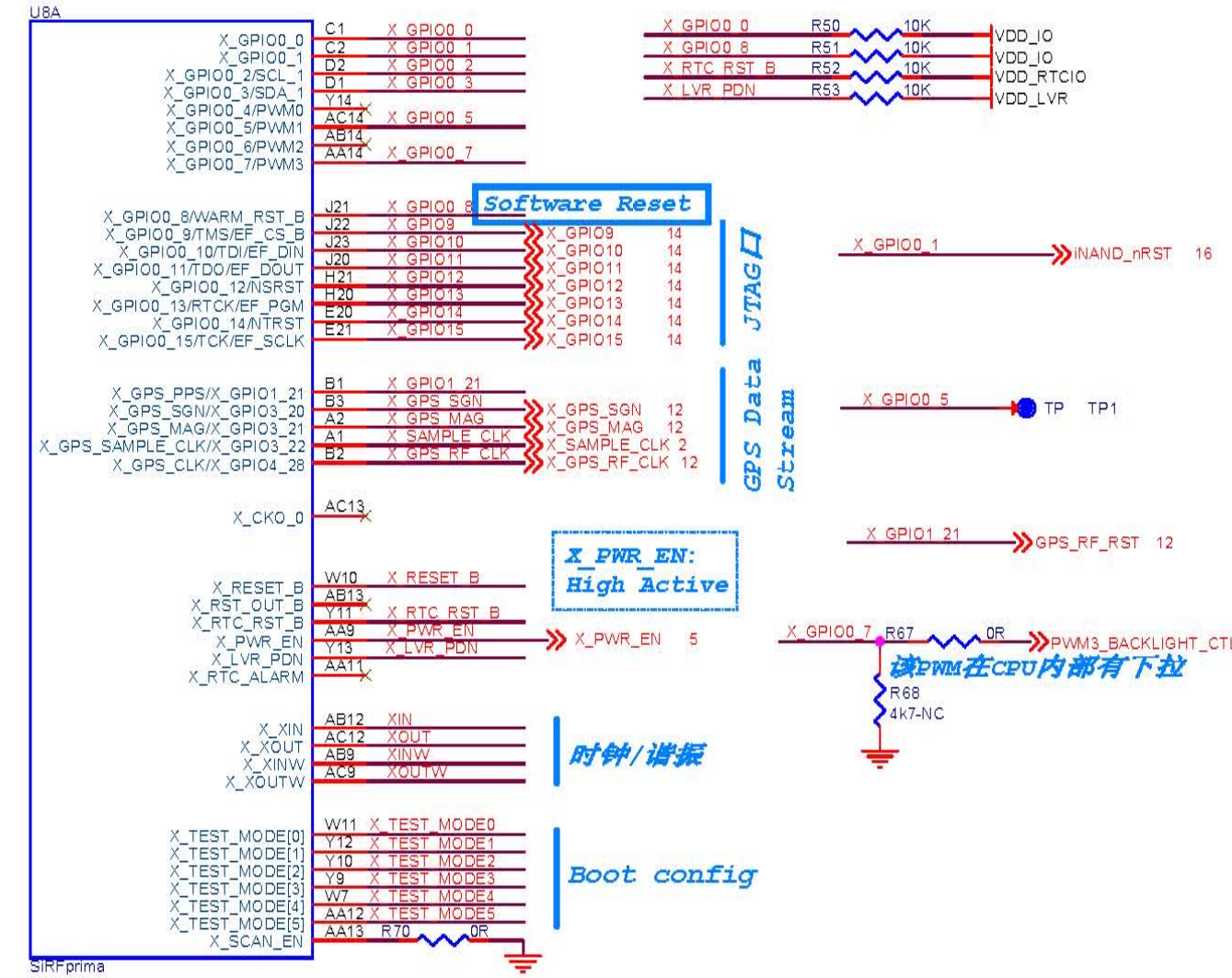

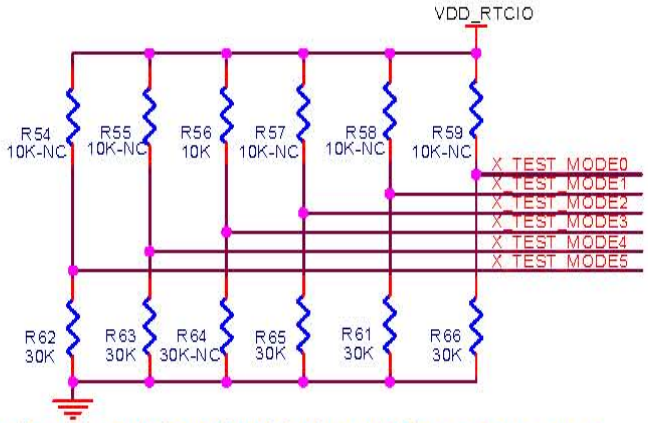

Default Boot:Embedded ROM+2KB page MLC NAND (8-bit) Test_Mode[5:0]=001000
Option Boot:4K/Page mLC Flash Test Mode[5:0]=001001
JTAG Mode:Test_Mode[5:0]=110000(用于第一次烧录SLC Nboot注意，用ROM_Boot可以直接通过UART烧录，不需JTAG)

Boot Configure for three options

Boot configuration	X_TEST_MODE[5:0]
Boundary Scan（JTAG）	6b110000
SLC Nand Boot 2KB Page 8 Bit	6b000101
MLC Nand Boot 2KB Page 8 Bit *Default*	6b001000
INAND Boot	6b001100
EFuse	6b110010
MLC Nand Boot 4KB Page 8 Bit *Option*	6b001001

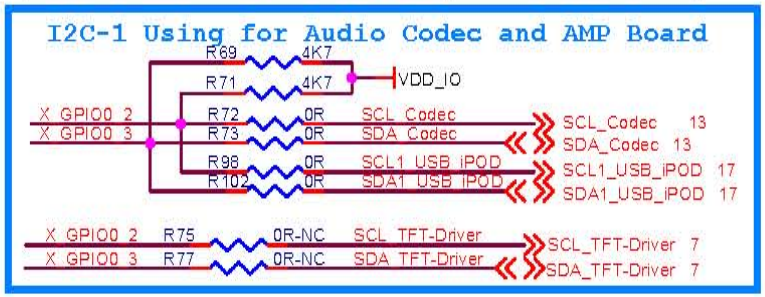

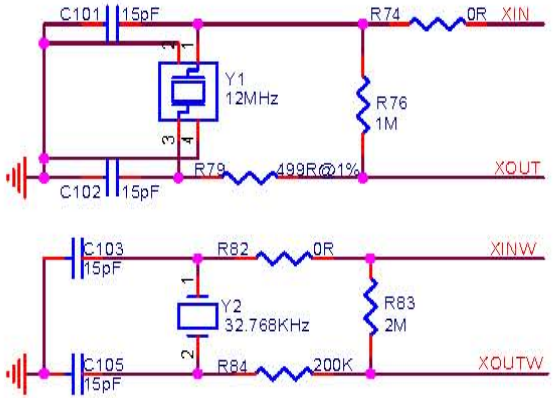

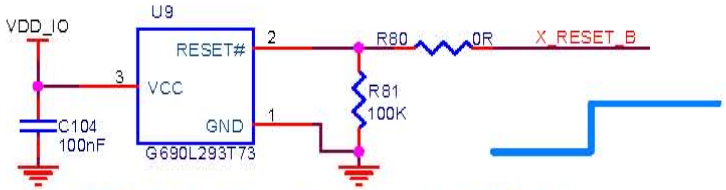

550mS > Reset time > 140mS

BVSS 2,3,5,6,7,8,9,10,11,12,13,14,15,16,17

路畅科技

Title	Boot Config/Reset
Size A4	QR-RD-020-V:1.0
Rev	V1.2
Date:	Monday, December 12, 2011
Sheet	4 of 18

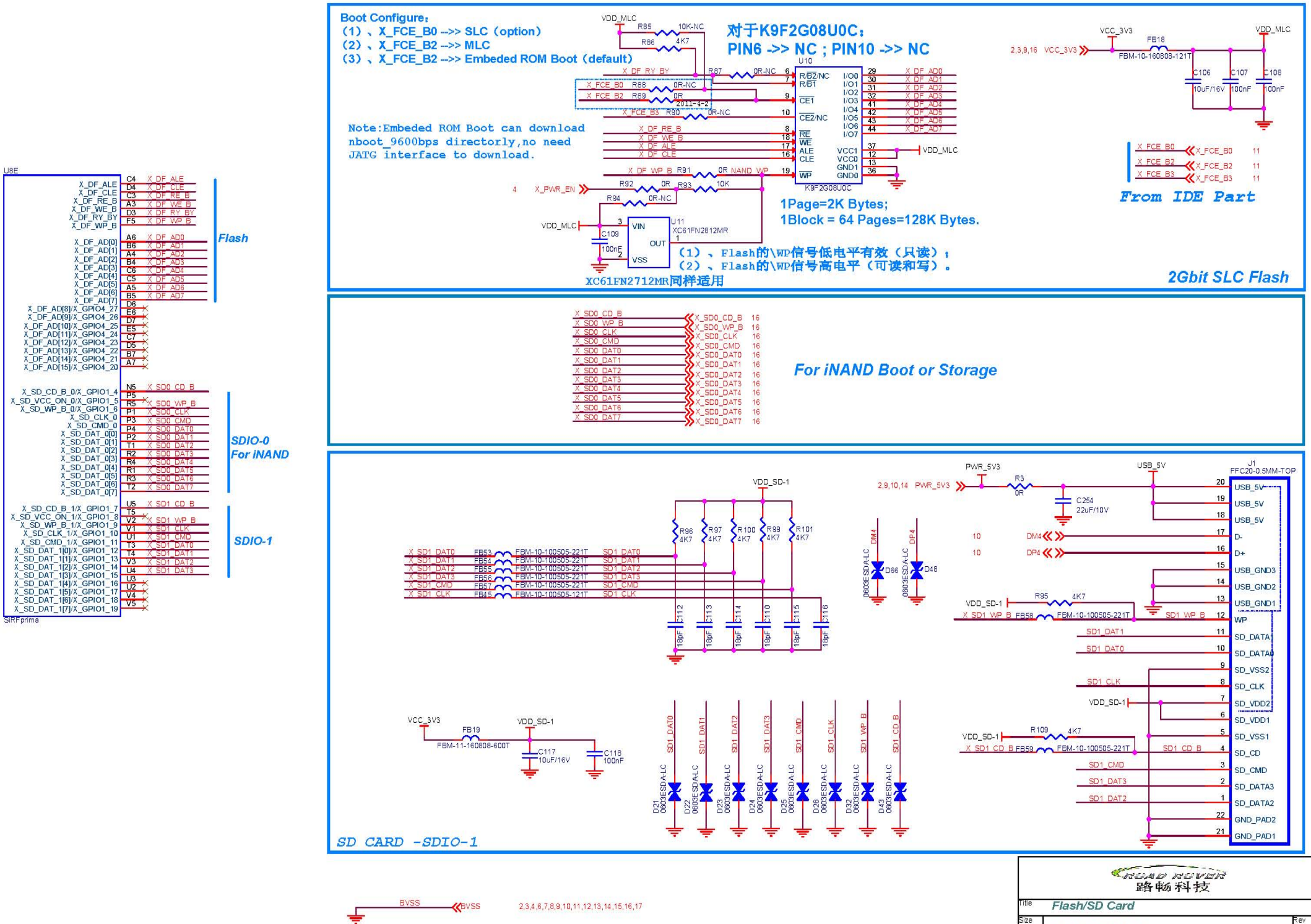
Boot Configure:
(1)、X_FCE_B0 -->> SLC (option)
(2)、X_FCE_B2 -->> MLC
(3)、X_FCE_B2 -->> Embeded ROM Boot (default)
对于K9F2G08U0C:
PIN6 -->> NC ; PIN10 -->> NC
Note:Embeded ROM Boot can download nboot_9600bps directorly,no need JATG interface to download.
1Page=2K Bytes;
1Block = 64 Pages=128K Bytes.
(1)、Flash的\WP信号低电平有效(只读);
(2)、Flash的\WP信号高电平(可读和写)。
XC61FN2712MR同样适用
2Gbit SLC Flash
From IDE Part
Flash
SDIO-0 For iNAND
SDIO-1
For iNAND Boot or Storage
SD CARD -SDIO-1
路畅科技
Title Flash/SD Card
Size A3
QR-RD-020-V:1.0
Rev V1.2
Date: Monday, December 12, 2011
Sheet 5 of 18

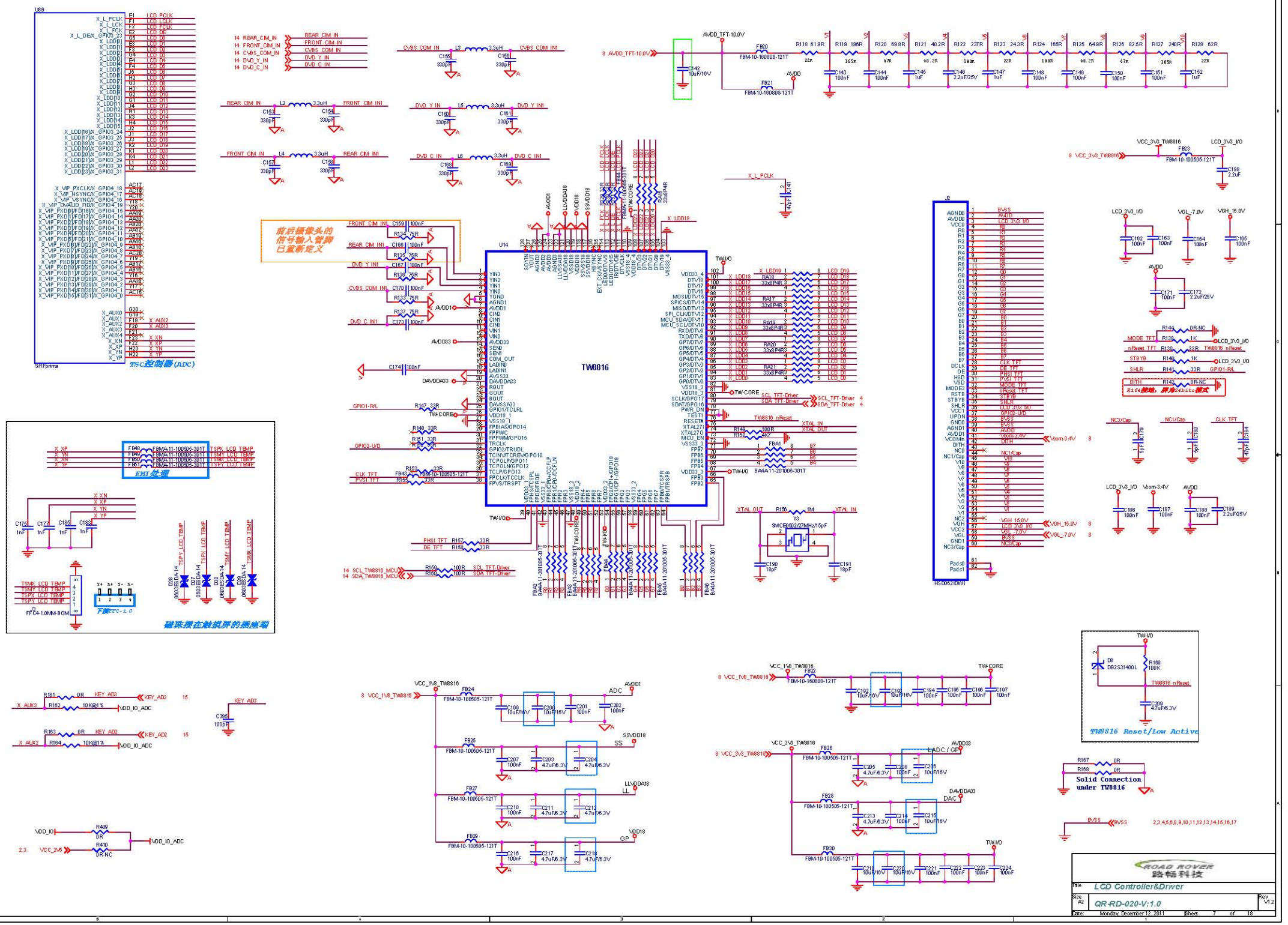
TSC控制器(ADC)
前后摄像头的信号输入管脚已重新定义
TW8816
EMI处理
磁珠摆在触摸屏的插座端
TW8816 Reset/Low Active
Solid Connection under TW8816
ROAD ROVER 路畅科技
Title LCD Controller&Driver
Size A2 QR-RD-020-V:1.0 Rev V1.2
Date: Monday, December 12, 2011 Sheet 7 of 18

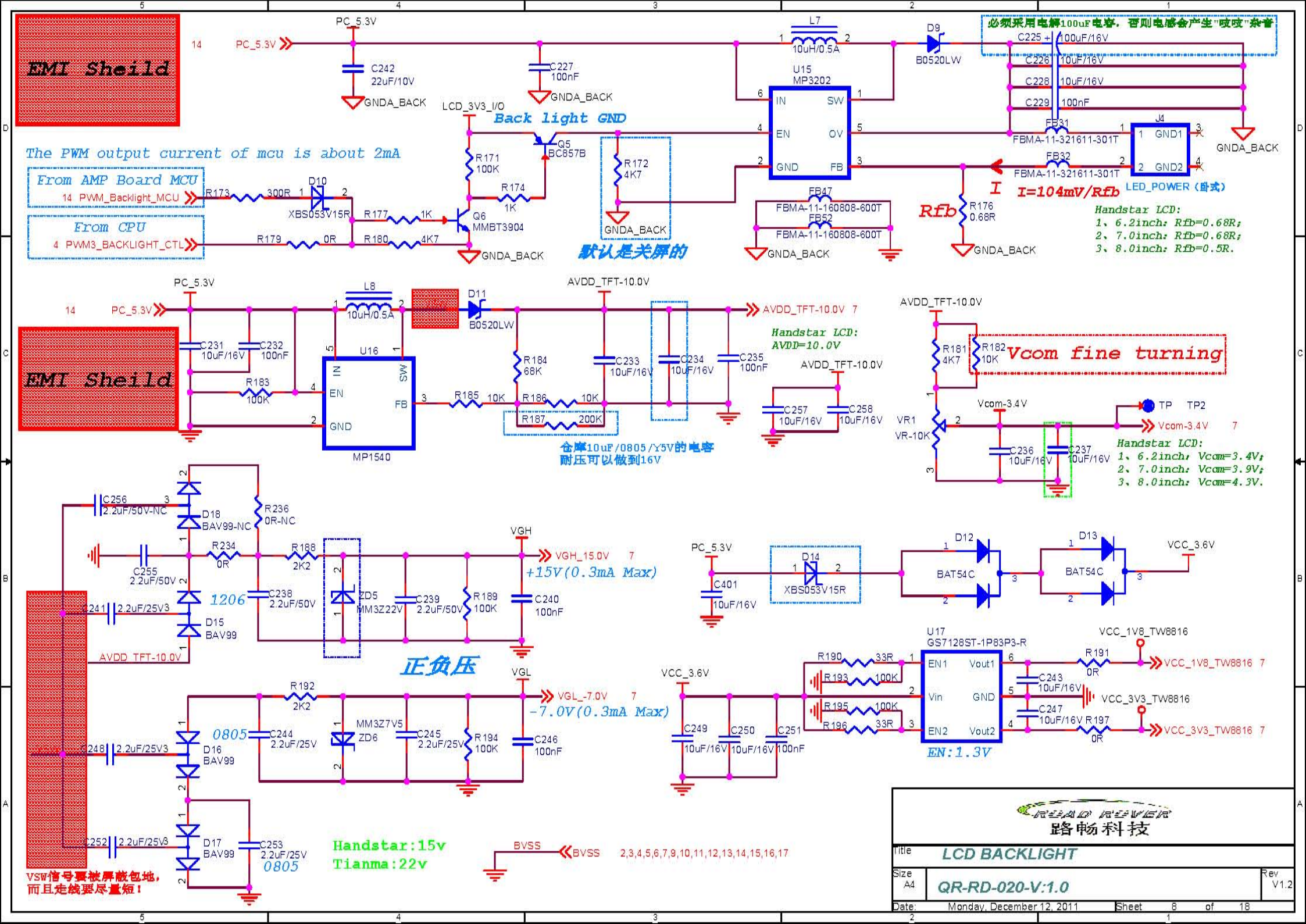
EMI Sheild
PC_5.3V
C242 22uF/10V
GNDA_BACK
C227 100nF
L7 10uH/0.5A
D9 B0520LW
必须采用电解100uF电容，否则电感会产生"吱吱"杂音
C225 100uF/16V
C226 10uF/16V
C228 10uF/16V
C229 100nF
U15 MP3202
IN SW EN OV GND FB
FB31 FBMA-11-321611-301T
FB32 FBMA-11-321611-301T
J4 GND1 GND2
LED_POWER (卧式)
LCD_3V3_I/O
Back light GND
Q5 BC857B
R171 100K
R174 1K
R172 4K7
默认是关屏的
The PWM output current of mcu is about 2mA
From AMP Board MCU
14 PWM_Backlight_MCU
From CPU
4 PWM3_BACKLIGHT_CTL
R173 300R
D10 XBS053V15R
R177 1K
R179 0R
R180 4K7
Q6 MMBT3904
FB47 FBMA-11-160808-600T
FB52 FBMA-11-160808-600T
Rfb
R176 0.68R
I
I=104mV/Rfb
Handstar LCD:
1、6.2inch: Rfb=0.68R;
2、7.0inch: Rfb=0.68R;
3、8.0inch: Rfb=0.5R.
L8 10uH/0.5A
D11 B0520LW
AVDD_TFT-10.0V
C231 10uF/16V
C232 100nF
R183 100K
U16 IN SW EN FB GND
MP1540
R185 10K
R184 68K
R186 10K
R187 200K
C233 10uF/16V
C234 10uF/16V
C235 100nF
Handstar LCD:
AVDD=10.0V
C257 10uF/16V
C258 10uF/16V
仓库10uF/0805/Y5V的电容
耐压可以做到16V
R181 4K7
R182 10K
Vcom fine turning
VR1 VR-10K
Vcom-3.4V
TP TP2
C236 10uF/16V
C237 10uF/16V
Handstar LCD:
1、6.2inch: Vcom=3.4V;
2、7.0inch: Vcom=3.9V;
3、8.0inch: Vcom=4.3V.
C256 2.2uF/50V-NC
D18 BAV99-NC
R236 0R-NC
R234 0R
R188 2K2
C255 2.2uF/50V
1206
C238 2.2uF/50V
ZD5 MM3Z22V
C239 2.2uF/50V
R189 100K
C240 100nF
VGH
VGH_15.0V
+15V(0.3mA Max)
C241 2.2uF/25V3
D15 BAV99
AVDD_TFT-10.0V
正负压
VGL
VGL_-7.0V
-7.0V(0.3mA Max)
R192 2K2
0805
C244 2.2uF/25V
MM3Z7V5 ZD6
C245 2.2uF/25V
R194 100K
C246 100nF
C248 2.2uF/25V3
D16 BAV99
C252 2.2uF/25V3
D17 BAV99
C253 2.2uF/25V
0805
Handstar:15v
Tianma:22v
VSW信号要被屏蔽包地，
而且走线要尽量短！
BVSS
2,3,4,5,6,7,9,10,11,12,13,14,15,16,17
PC_5.3V
C401 10uF/16V
D14 XBS053V15R
D12 BAT54C
D13 BAT54C
VCC_3.6V
U17 GS7128ST-1P83P3-R
EN1 Vout1 Vin GND EN2 Vout2
R190 33R
R193 100K
R195 100K
R196 33R
C249 10uF/16V
C250 10uF/16V
C251 100nF
EN:1.3V
R191 0R
VCC_1V8_TW8816
C243 10uF/16V
VCC_3V3_TW8816
C247 10uF/16V
R197 0R
READ RIVER
路畅科技
Title
LCD BACKLIGHT
Size A4
QR-RD-020-V:1.0
Rev V1.2
Date: Monday, December 12, 2011
Sheet 8 of 18

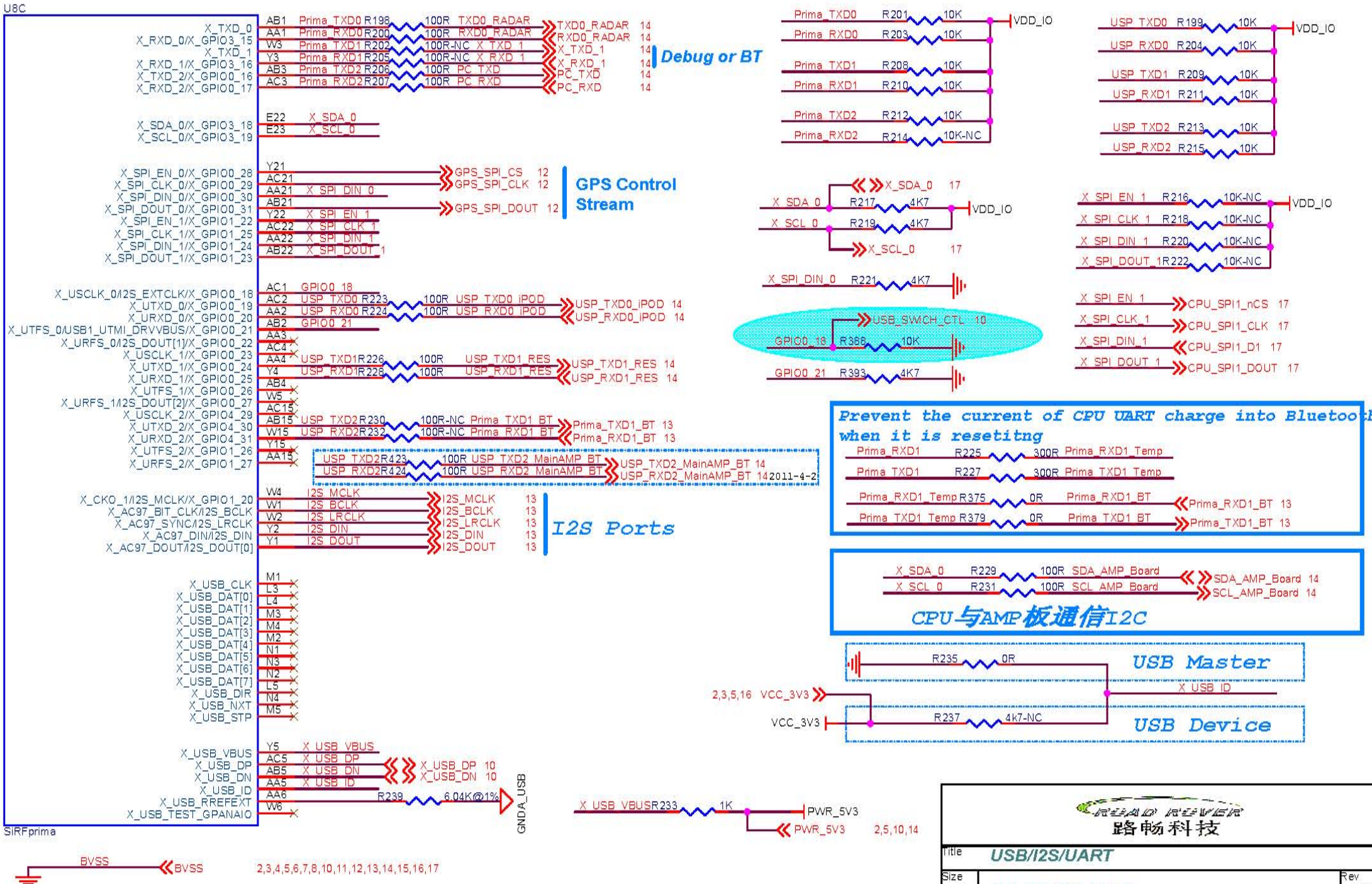
U8C
SiRFprima
Debug or BT
GPS Control Stream
I2S Ports
Prevent the current of CPU UART charge into Bluetooth when it is resetitng
CPU与AMP板通信I2C
USB Master
USB Device
路畅科技
USB/I2S/UART
QR-RD-020-V:1.0
Monday, December 12, 2011
Sheet 9 of 18

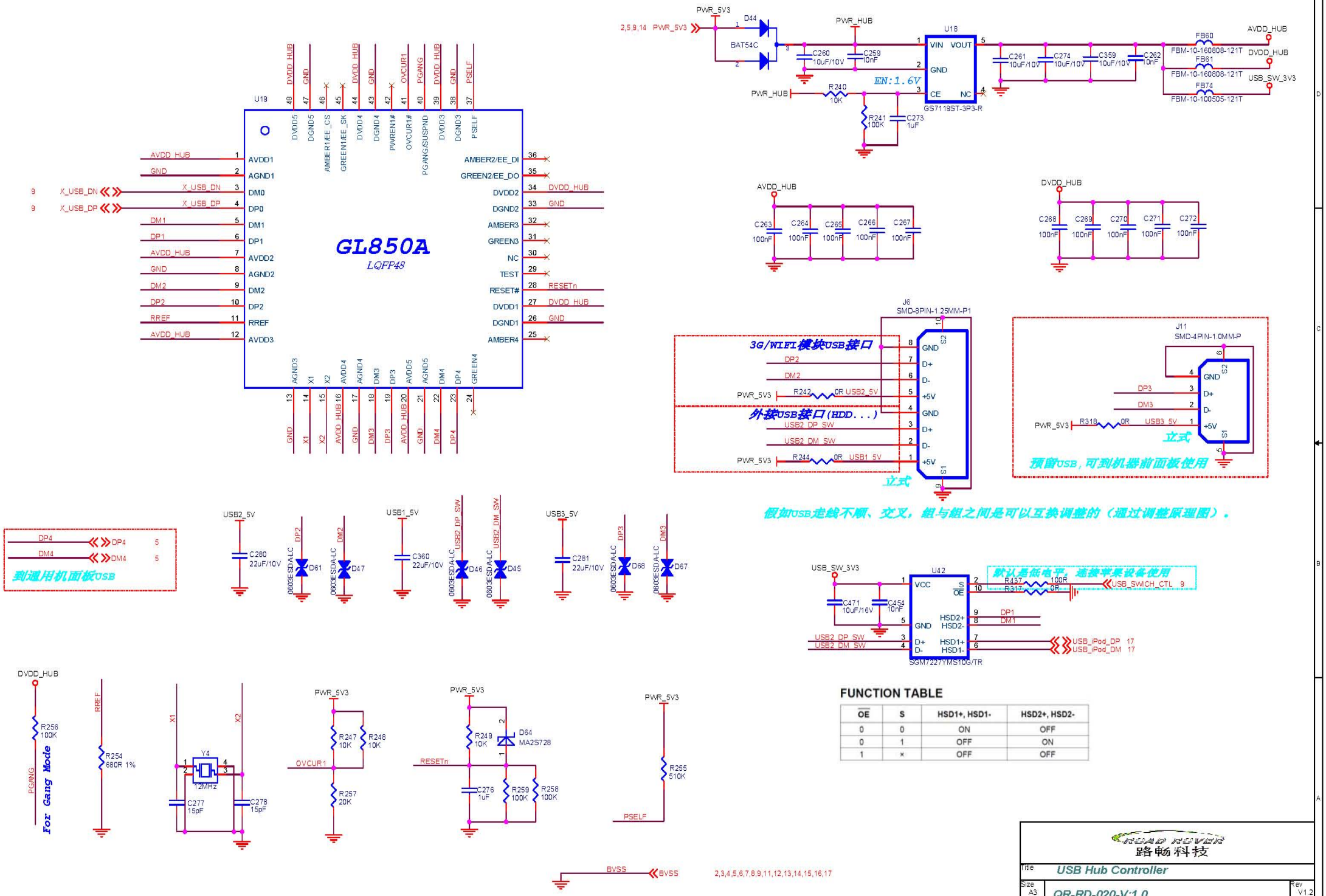

FUNCTION TABLE

$\overline{OE}$	S	HSD1+, HSD1-	HSD2+, HSD2-
0	0	ON	OFF
0	1	OFF	ON
1	×	OFF	OFF

Title	USB Hub Controller
Size A3	QR-RD-020-V:1.0
Rev	V1.2
Date:	Monday, December 12, 2011
Sheet	10 of 18

路畅科技

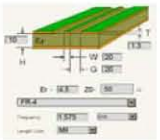

TCXO

Caution:
1. This page is RF module, so should pay more attention to PCB layout.The RF Z0 is 50ohm,the drawing should fit RF rules and RF portion must be put into one shielding case.
2. The value of components which marked asterisk "*" may be tuned in different product. These components are in RF matching nets, their values are effected by the PCB material parameter,tolerance of component,and so on.
3. The idiosyncracy and tolerance of passive components such as capacitors,inductances, has been appointed. These components just can be substituted by which are more high precision.
4. There are many DC filtering capacitors in the schematic, please put them close to the source pins.Putting some ground vias near to the ground pin and in gorund panel is well for DC filtering and EMI rejection also.

RF Microstrip
Z0= 50 ohm

Epson：Default
ITTI：option - TV30-16.367667MHz/0.5ppm

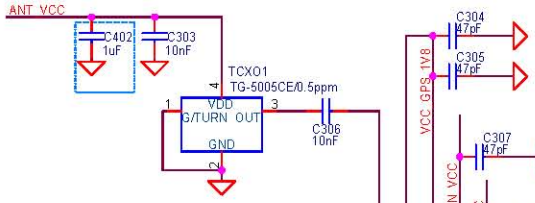

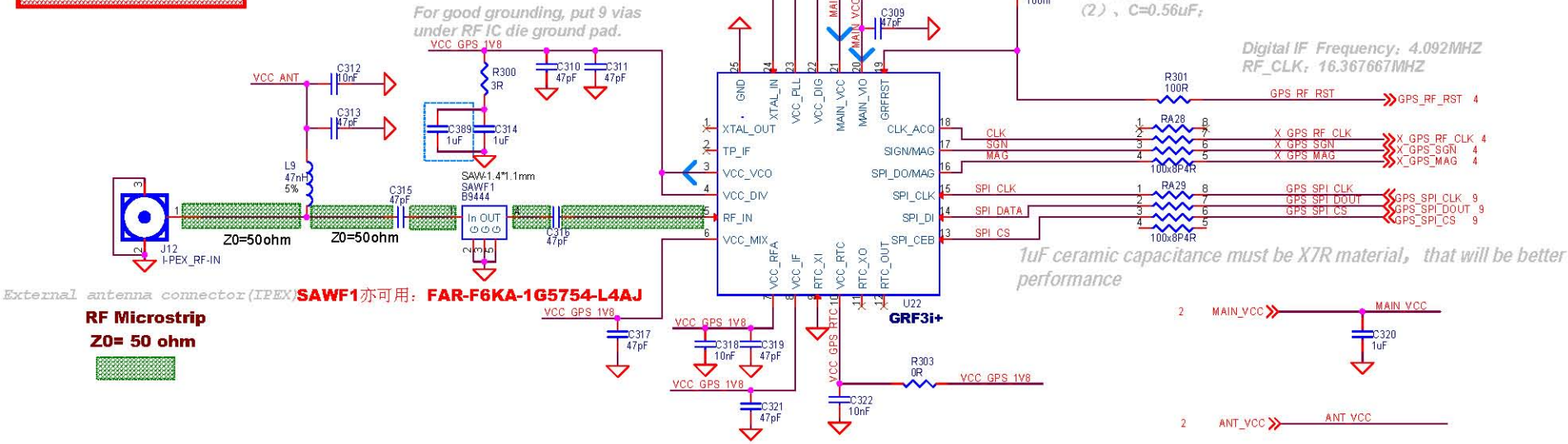

1、GPS RF Receiver core
2、Must be placed into RF shielding case

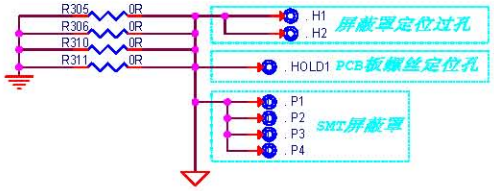

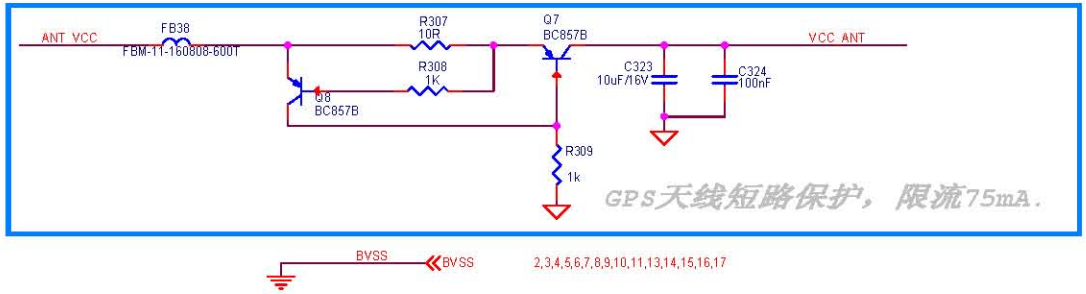

ROAD ROVER 路畅科技	
Title	GPS RF
Size A3	QR-RD-020-V:1.0 Rev V1.2
Date: Monday, December 12, 2011	Sheet 12 of 18

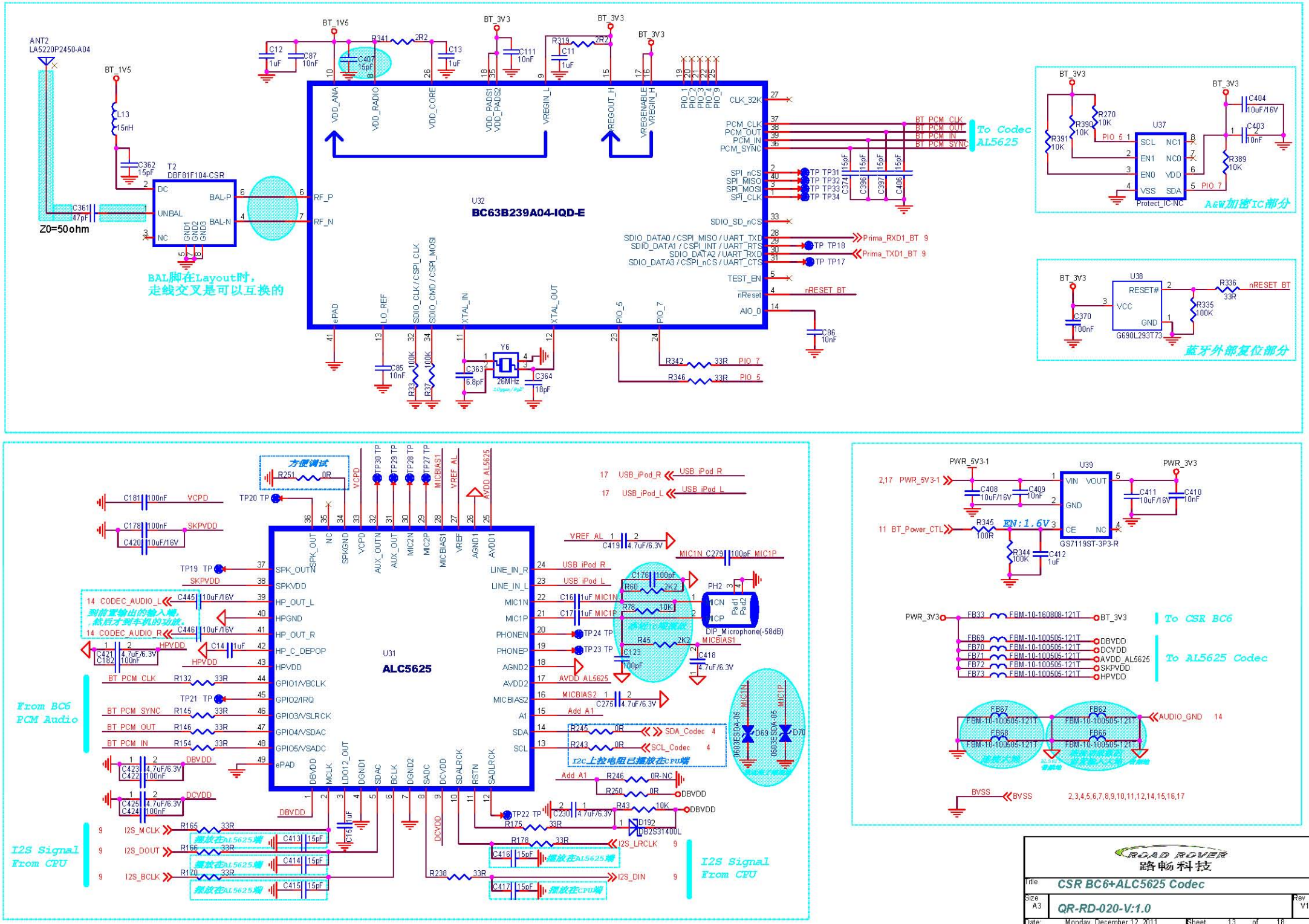
ANT2
LA5220P2450-A04
Z0=50ohm
T2
DBF81F104-CSR
BAL脚在Layout时，
走线交叉是可以互换的
U32
BC63B239A04-IQD-E
To Codec
AL5625
A&W加密IC部分
Protect_IC-NC
蓝牙外部复位部分
U31
ALC5625
方便调试
From BC6
PCM Audio
I2S Signal
From CPU
I2S Signal
From CPU
U39
GS7119ST-3P3-R
EN:1.6V
DIP_Microphone(-58dB)
To CSR BC6
To AL5625 Codec
I2C上拉电阻已摆放在CPU端
路畅科技
CSR BC6+ALC5625 Codec
QR-RD-020-V:1.0
Monday, December 12, 2011
Sheet 13 of 18

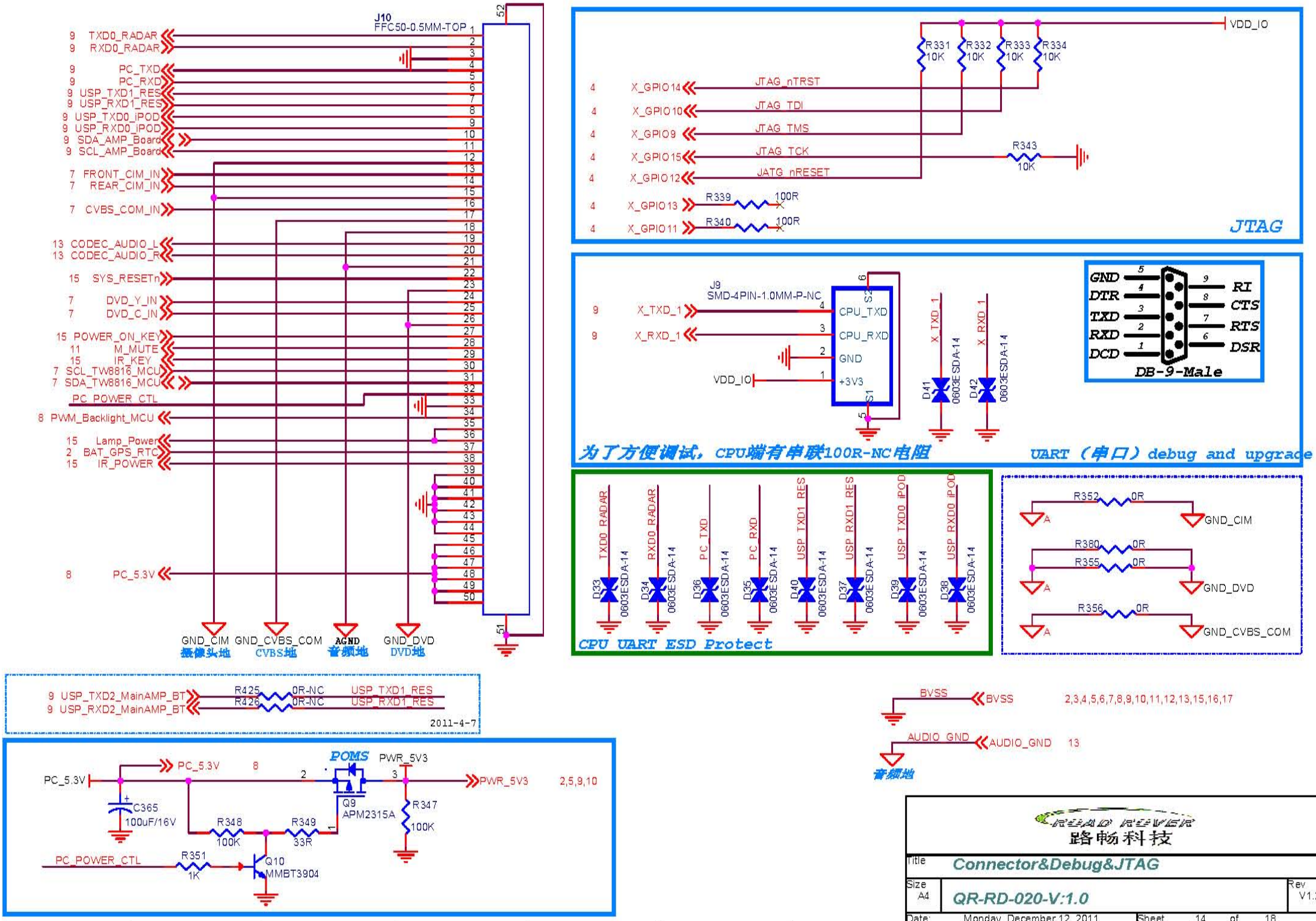
J10
FFC50-0.5MM-TOP
9 TXD0_RADAR
9 RXD0_RADAR
9 PC_TXD
9 PC_RXD
9 USP_TXD1_RES
9 USP_RXD1_RES
9 USP_TXD0_iPOD
9 USP_RXD0_iPOD
9 SDA_AMP_Board
9 SCL_AMP_Board
7 FRONT_CIM_IN
7 REAR_CIM_IN
7 CVBS_COM_IN
13 CODEC_AUDIO_L
13 CODEC_AUDIO_R
15 SYS_RESETn
7 DVD_Y_IN
7 DVD_C_IN
15 POWER_ON_KEY
11 M_MUTE
15 IR_KEY
7 SCL_TW8816_MCU
7 SDA_TW8816_MCU
PC_POWER_CTL
8 PWM_Backlight_MCU
15 Lamp_Power
2 BAT_GPS_RTC
15 IR_POWER
8 PC_5.3V
GND_CIM 摄像头地
GND_CVBS_COM CVBS地
AGND 音频地
GND_DVD DVD地
VDD_IO
R331 10K
R332 10K
R333 10K
R334 10K
4 X_GPIO14 JTAG_nTRST
4 X_GPIO10 JTAG_TDI
4 X_GPIO9 JTAG_TMS
4 X_GPIO15 JTAG_TCK
4 X_GPIO12 JATG_nRESET
R343 10K
4 X_GPIO13 R339 100R
4 X_GPIO11 R340 100R
JTAG
J9
SMD-4PIN-1.0MM-P-NC
9 X_TXD_1
9 X_RXD_1
CPU_TXD
CPU_RXD
GND
VDD_IO
+3V3
D41 0603ESDA-14
D42 0603ESDA-14
GND
DTR
TXD
RXD
DCD
RI
CTS
RTS
DSR
DB-9-Male
为了方便调试，CPU端有串联100R-NC电阻
UART（串口）debug and upgrade
D33 TXD0_RADAR 0603ESDA-14
D34 RXD0_RADAR 0603ESDA-14
D36 PC_TXD 0603ESDA-14
D35 PC_RXD 0603ESDA-14
D40 USP_TXD1_RES 0603ESDA-14
D37 USP_RXD1_RES 0603ESDA-14
D39 USP_TXD0_iPOD 0603ESDA-14
D38 USP_RXD0_iPOD 0603ESDA-14
CPU UART ESD Protect
R352 0R GND_CIM
R380 0R
R355 0R GND_DVD
R356 0R GND_CVBS_COM
9 USP_TXD2_MainAMP_BT R425 0R-NC USP_TXD1_RES
9 USP_RXD2_MainAMP_BT R426 0R-NC USP_RXD1_RES
2011-4-7
BVSS 2,3,4,5,6,7,8,9,10,11,12,13,15,16,17
AUDIO_GND 13
音频地
PC_5.3V
C365 100uF/16V
POMS
Q9 APM2315A
PWR_5V3
2,5,9,10
R348 100K
R349 33R
R347 100K
PC_POWER_CTL
R351 1K
Q10 MMBT3904
路畅科技
Title Connector&Debug&JTAG
Size A4
QR-RD-020-V:1.0
Rev V1.2
Date: Monday, December 12, 2011
Sheet 14 of 18

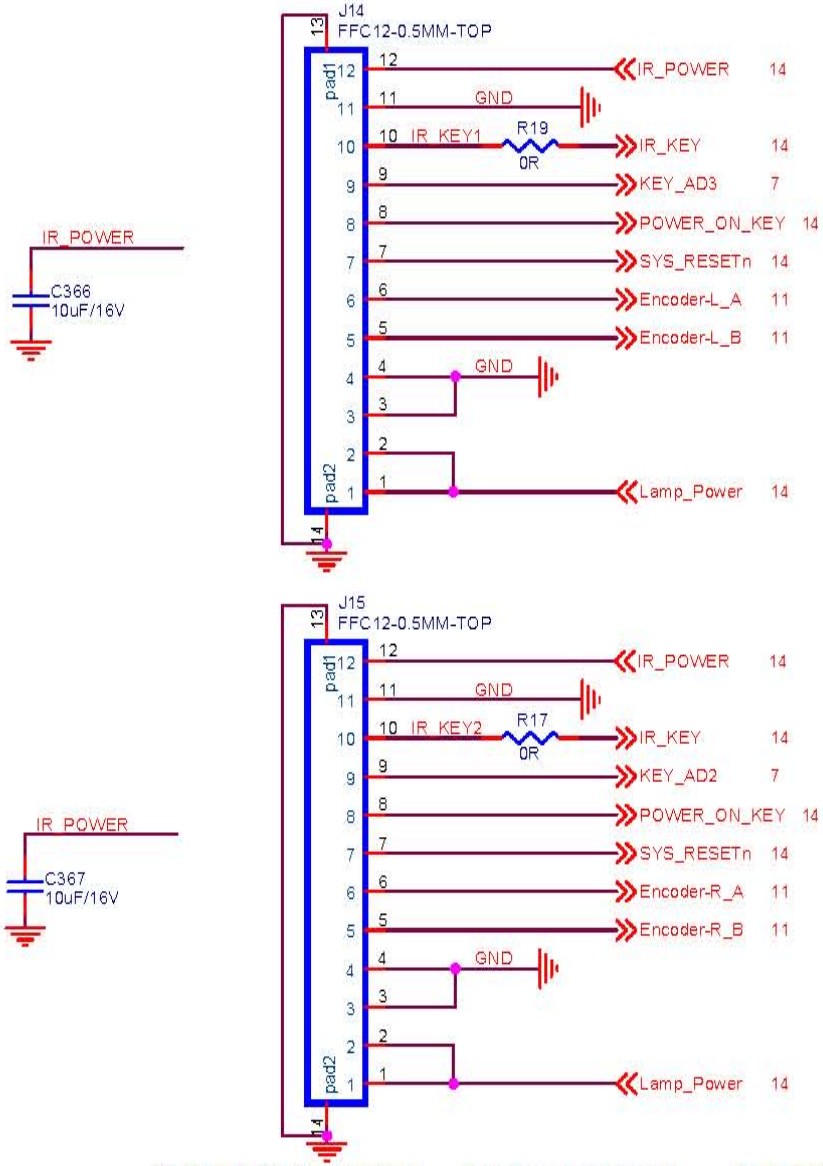

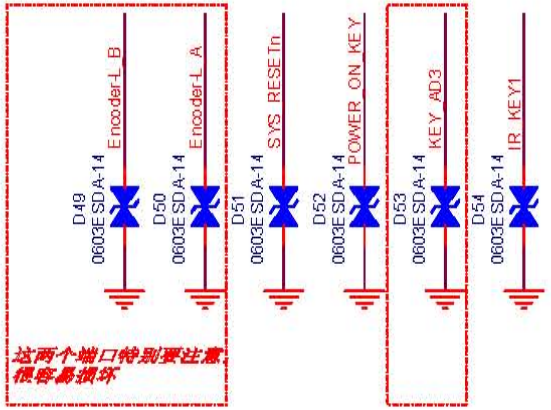

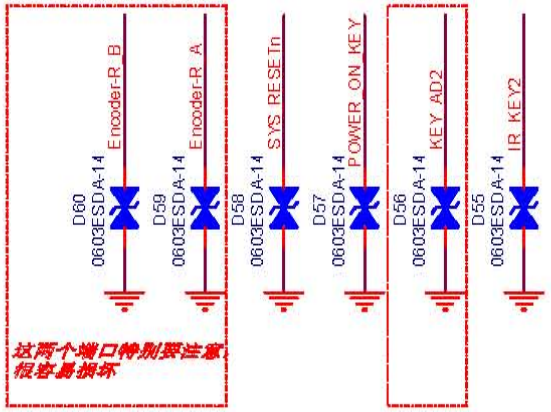

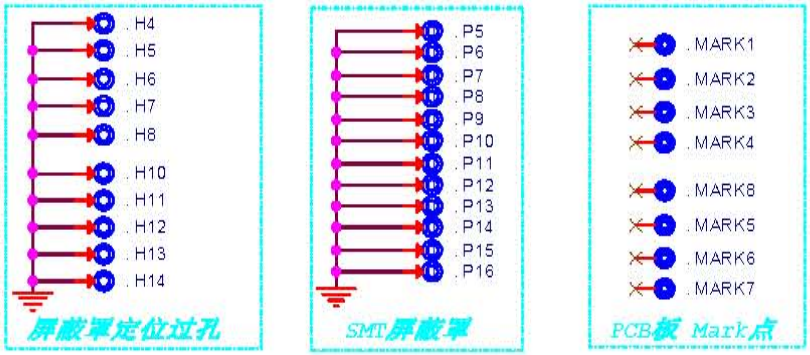

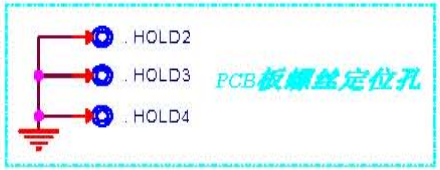

路畅科技

Title	Key Connector
Size A4	QR-RD-020-V:1.0
Rev	V1.2
Date:	Monday, December 12, 2011
Sheet	15 of 18

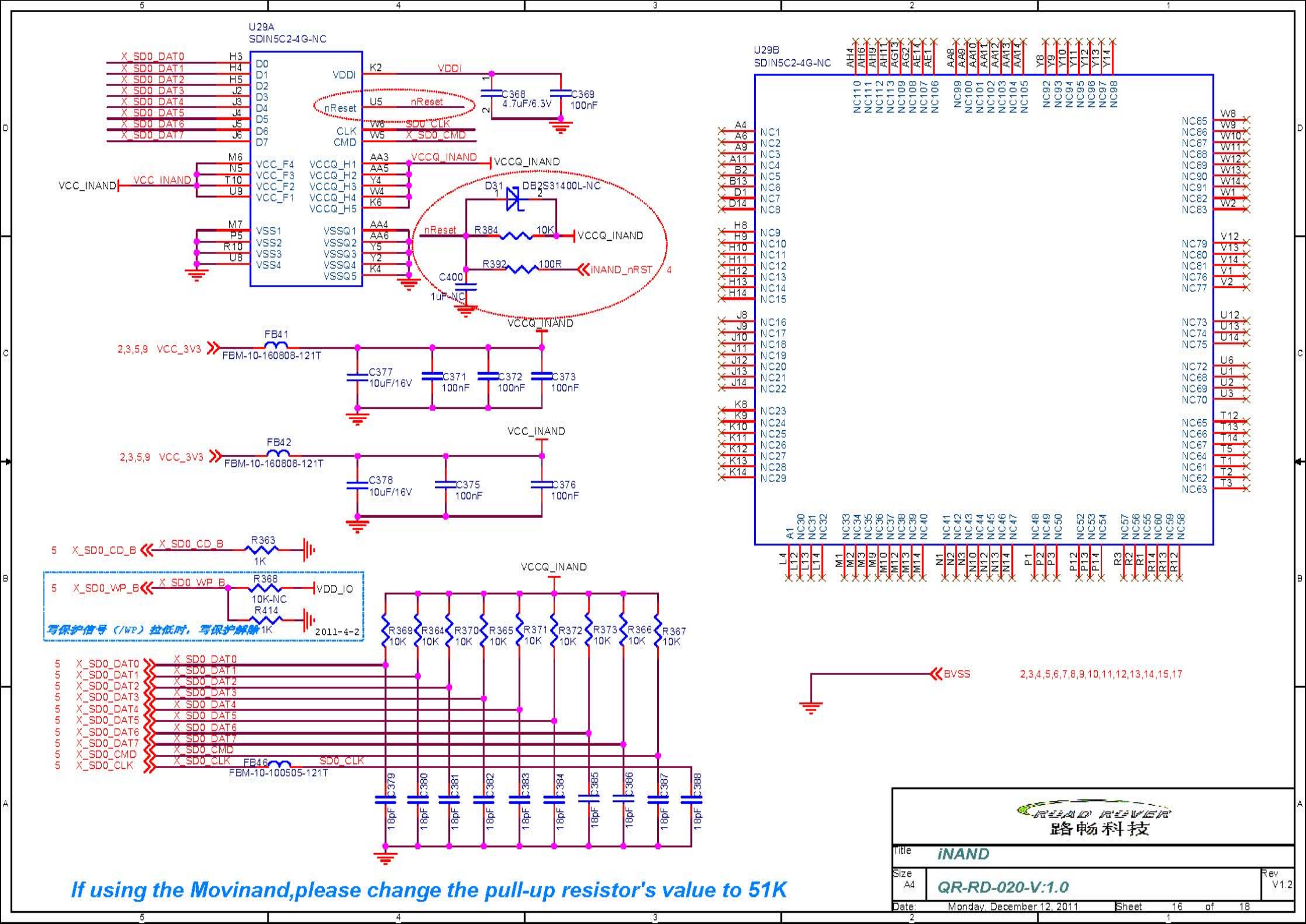
U29A
SDIN5C2-4G-NC
U29B
SDIN5C2-4G-NC
X_SD0_DAT0
X_SD0_DAT1
X_SD0_DAT2
X_SD0_DAT3
X_SD0_DAT4
X_SD0_DAT5
X_SD0_DAT6
X_SD0_DAT7
VDDi
nReset
SD0_CLK
X_SD0_CMD
VCC_INAND
VCCQ_INAND
D31
DB2S31400L-NC
R384
10K
R392
100R
iNAND_nRST
C400
1uF-NC
C368
4.7uF/6.3V
C369
100nF
FB41
FBM-10-160808-121T
2,3,5,9 VCC_3V3
C377
10uF/16V
C371
100nF
C372
100nF
C373
100nF
FB42
FBM-10-160808-121T
C378
10uF/16V
C375
100nF
C376
100nF
X_SD0_CD_B
R363
1K
X_SD0_WP_B
R368
10K-NC
VDD_IO
R414
1K
写保护信号（/WP）拉低时，写保护解除
2011-4-2
R369 10K
R364 10K
R370 10K
R365 10K
R371 10K
R372 10K
R373 10K
R366 10K
R367 10K
FB46
FBM-10-100505-121T
C379 18pF
C380 18pF
C381 18pF
C382 18pF
C383 18pF
C384 18pF
C385 18pF
C386 18pF
C387 18pF
C388 18pF
BVSS
2,3,4,5,6,7,8,9,10,11,12,13,14,15,17
If using the Movinand,please change the pull-up resistor's value to 51K
路畅科技
Title
iNAND
Size
A4
QR-RD-020-V:1.0
Rev
V1.2
Date:
Monday, December 12, 2011
Sheet
16
of
18

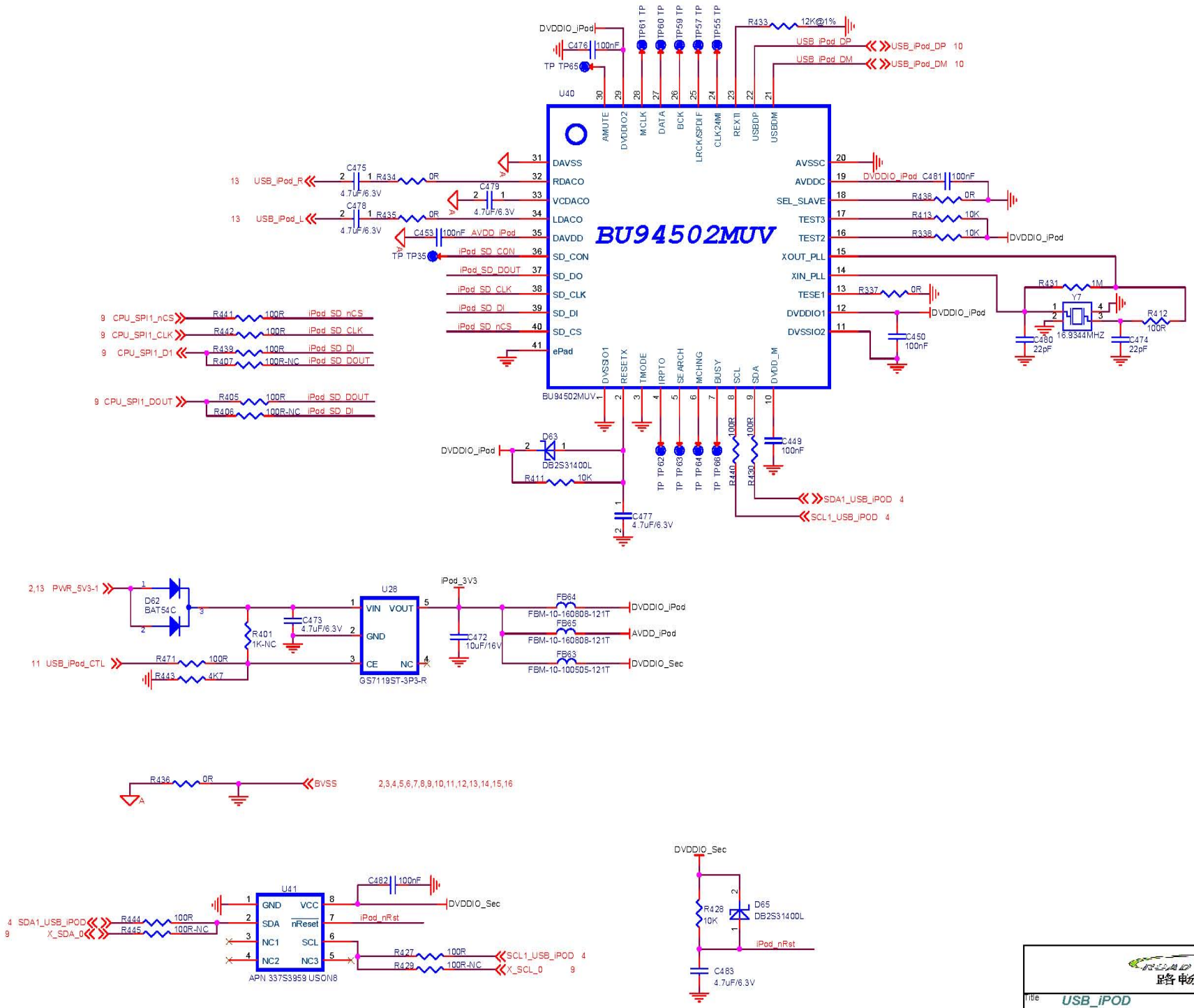

路畅科技

Title	USB_iPOD
Size A3	QR-RD-020-V:1.0
Rev	V1.2
Date:	Monday, December 12, 2011
Sheet	17 of 18

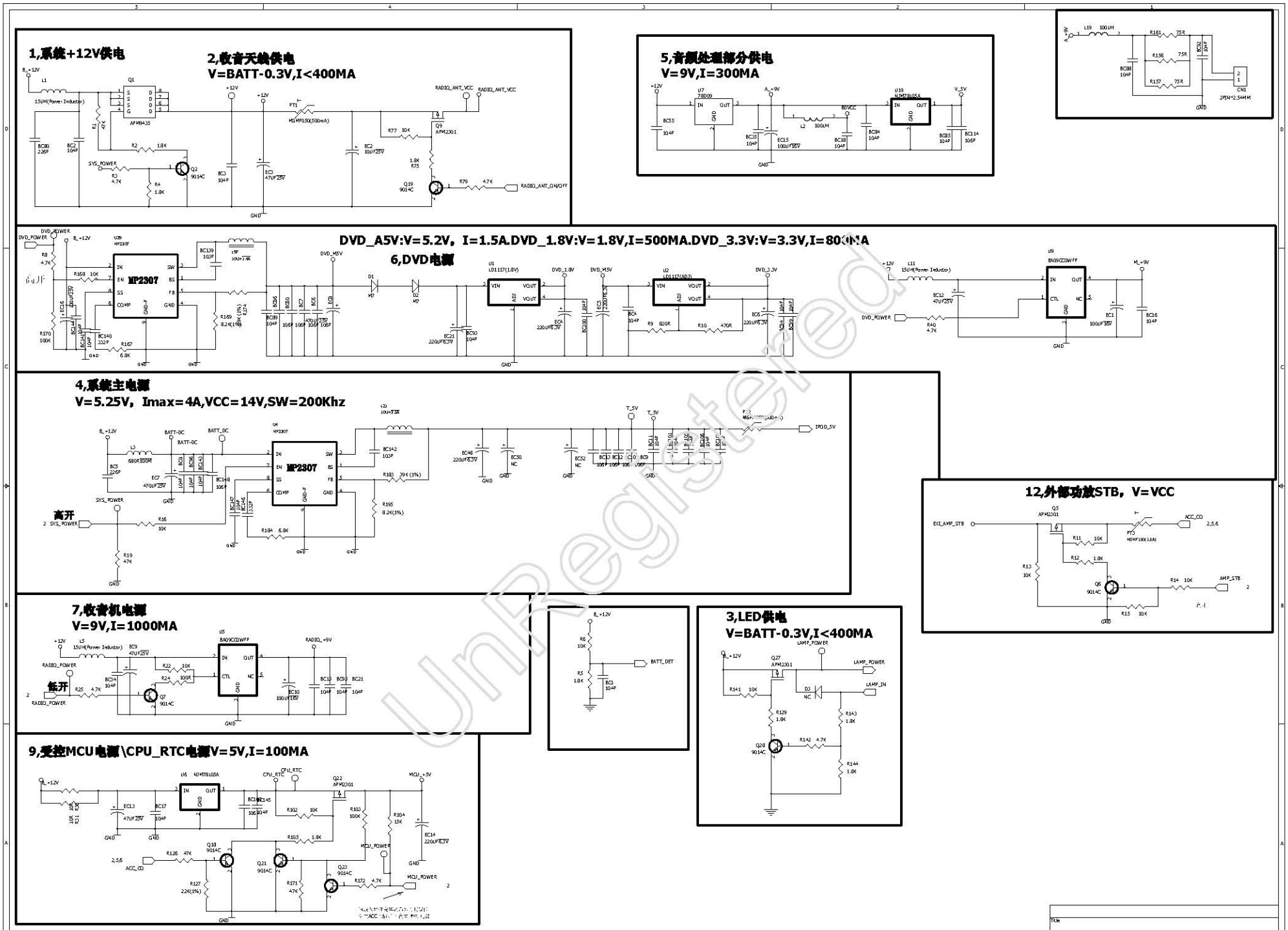
1,系统+12V供电
2,收音天线供电
V=BATT-0.3V,I<400MA
5,音频处理部分供电
V=9V,I=300MA
DVD_A5V:V=5.2V，I=1.5A.DVD_1.8V:V=1.8V,I=500MA.DVD_3.3V:V=3.3V,I=800MA
6,DVD电源
4,系统主电源
V=5.25V，Imax=4A,VCC=14V,SW=200Khz
12,外部功放STB，V=VCC
7,收音机电源
V=9V,I=1000MA
3,LED供电
V=BATT-0.3V,I<400MA
9,受控MCU电源\CPU_RTC电源V=5V,I=100MA
高开
低开
MP2307
UnRegistered

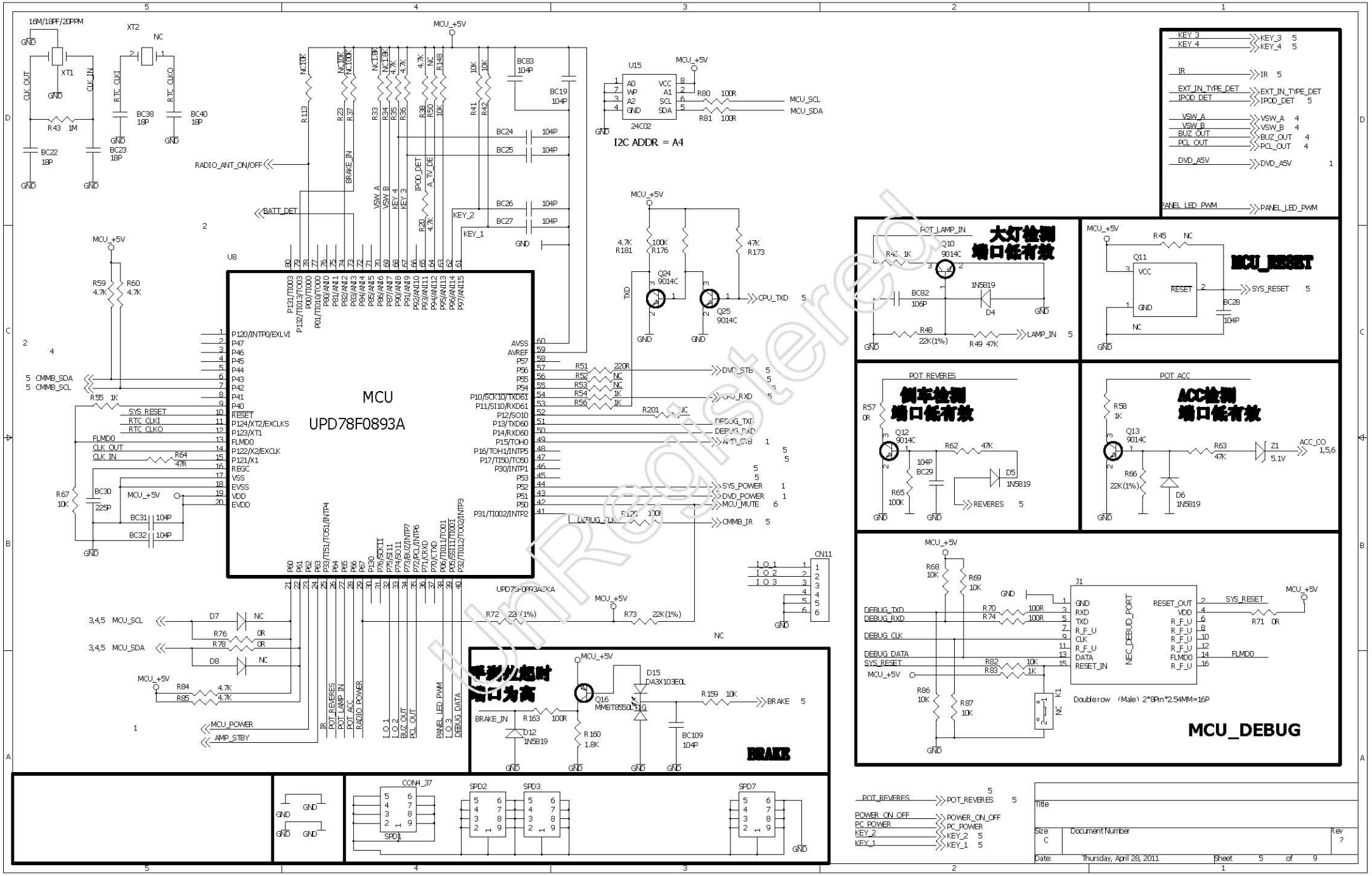

UnRegistered

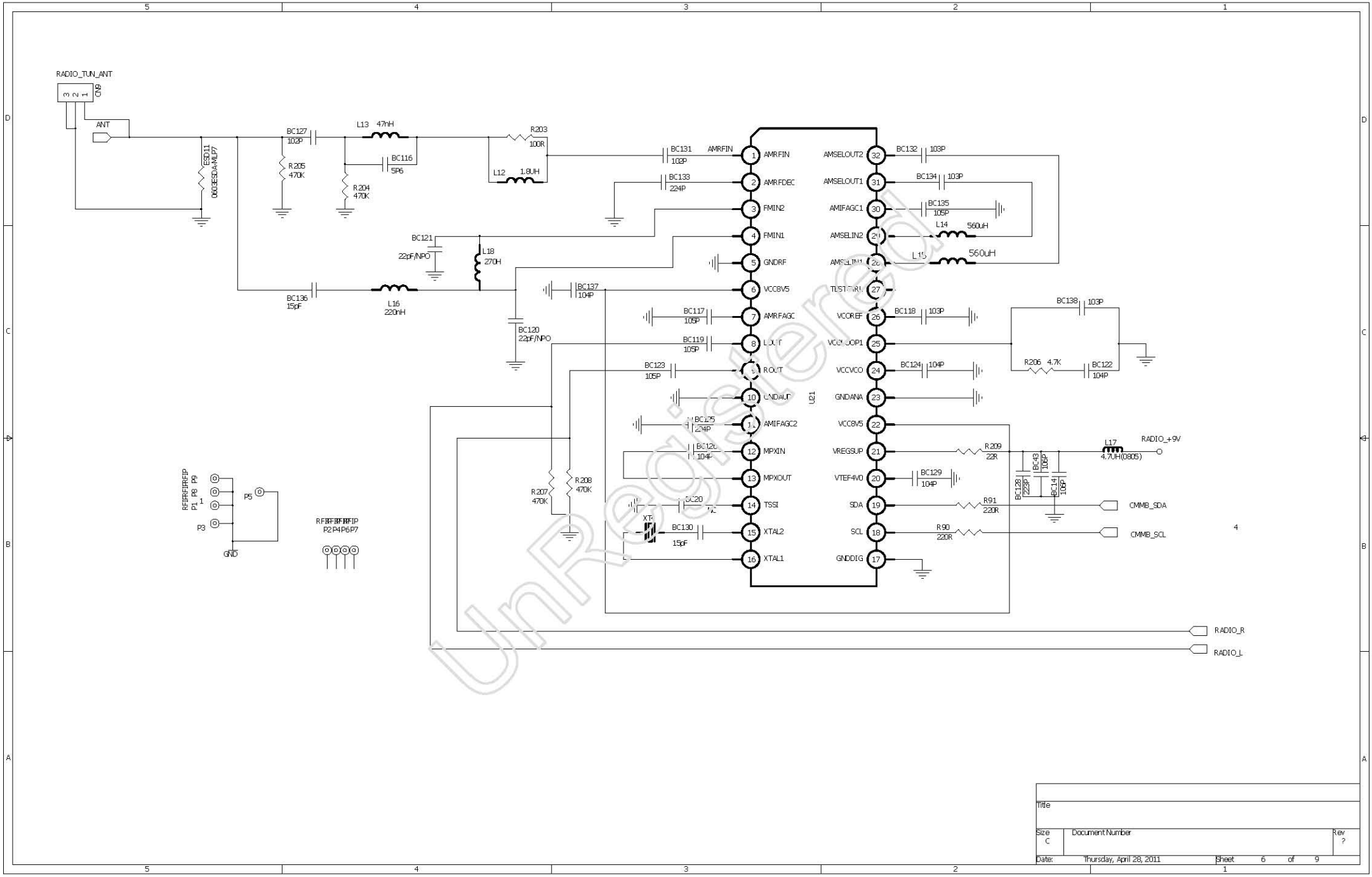

Title			
Size C	Document Number		Rev ?
Date: Thursday, April 28, 2011	Sheet 6 of 9		

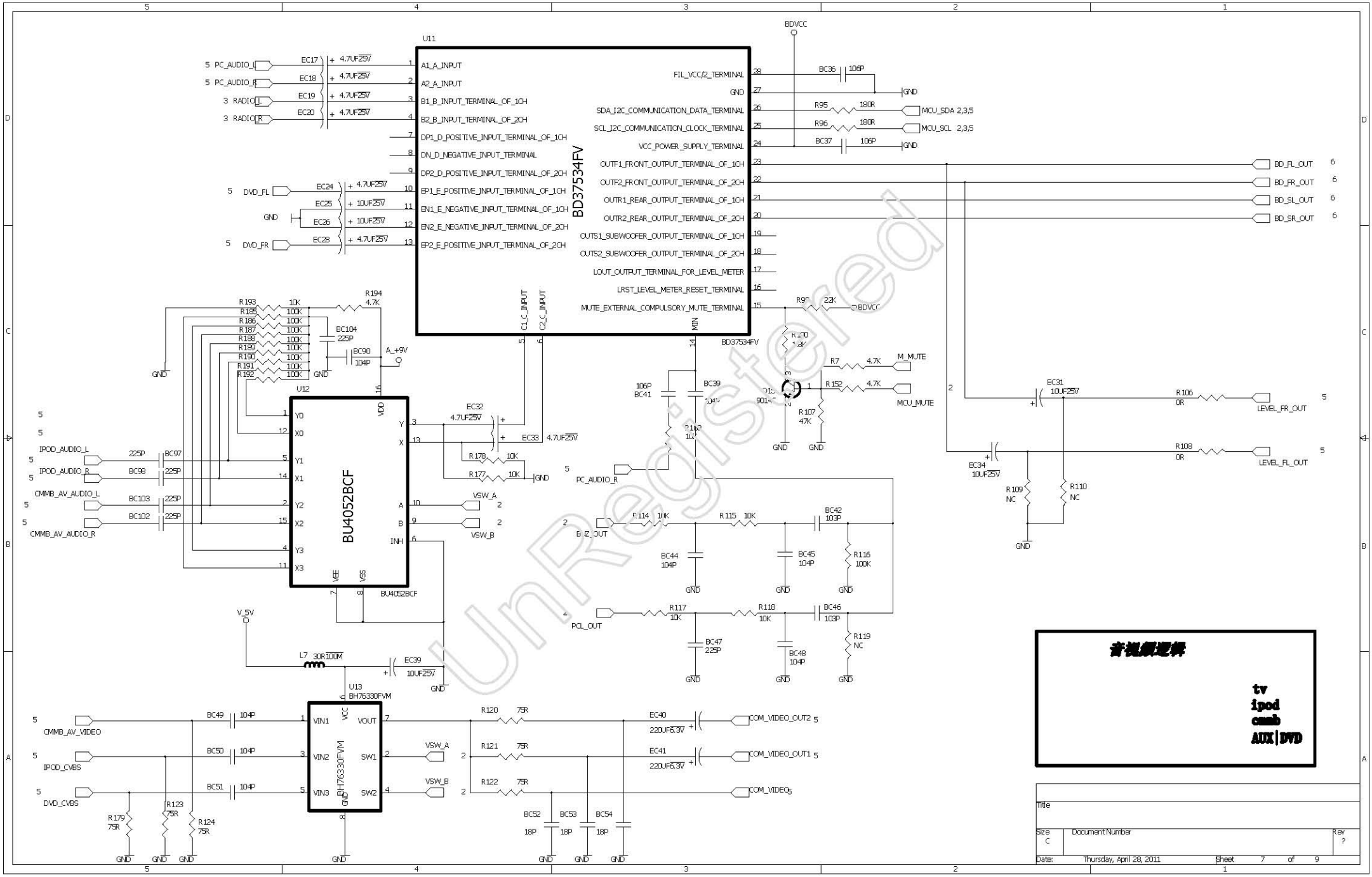

UnRegistered

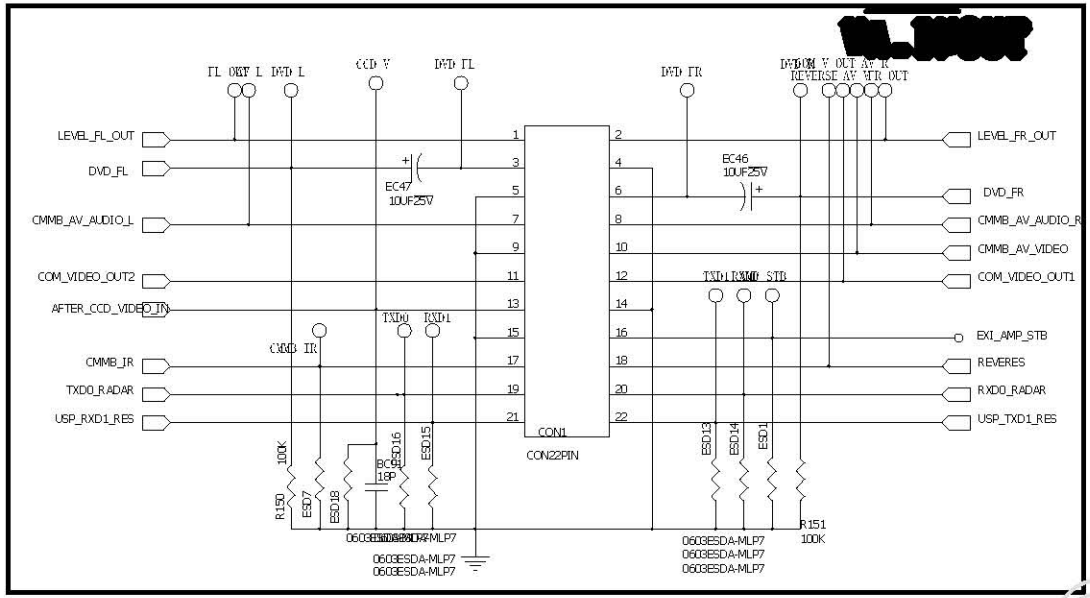

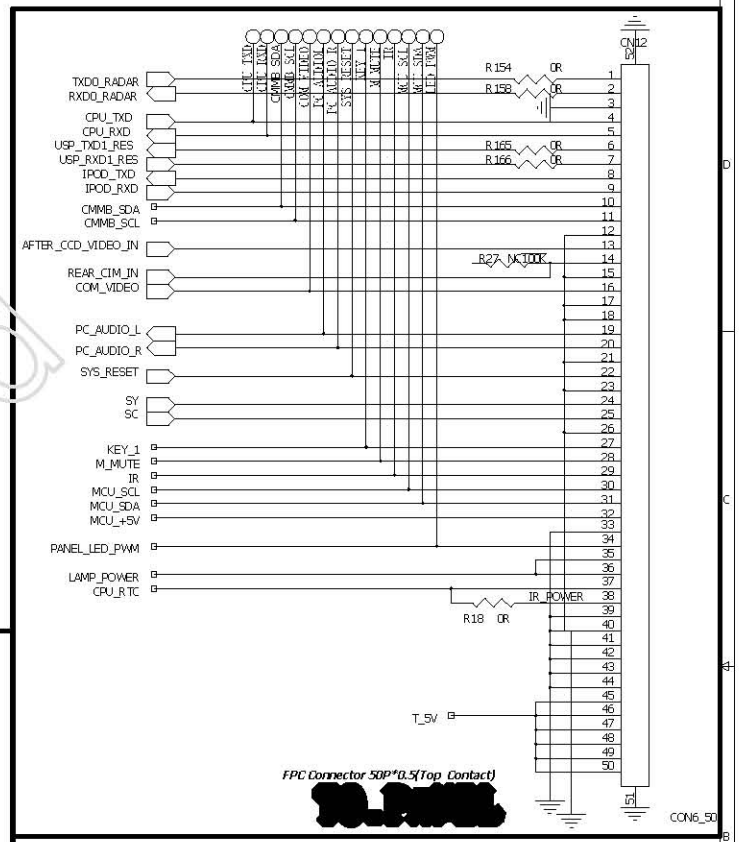

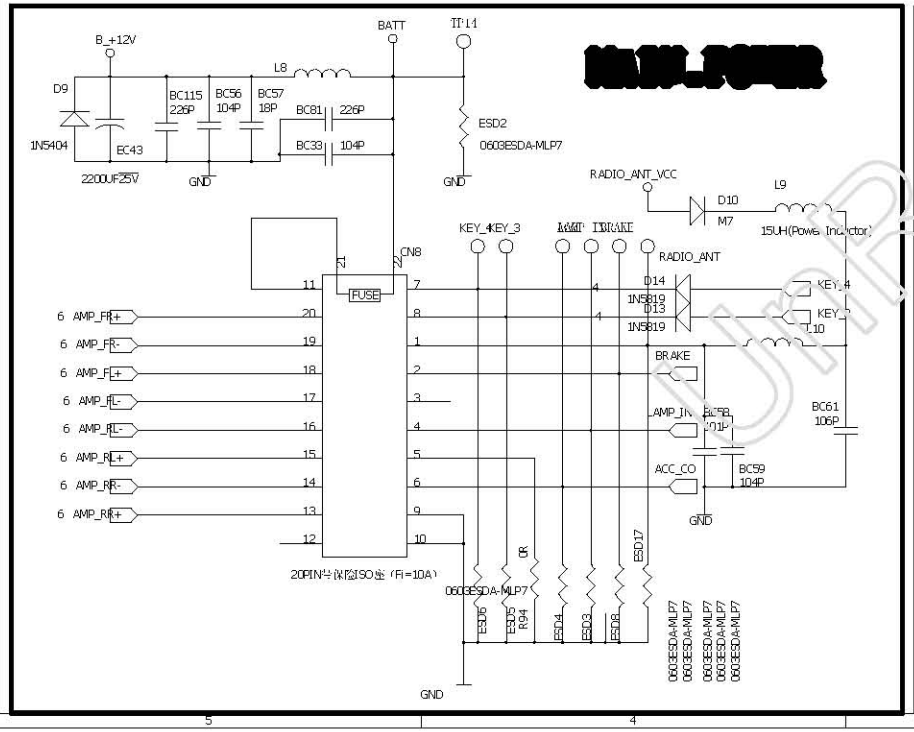

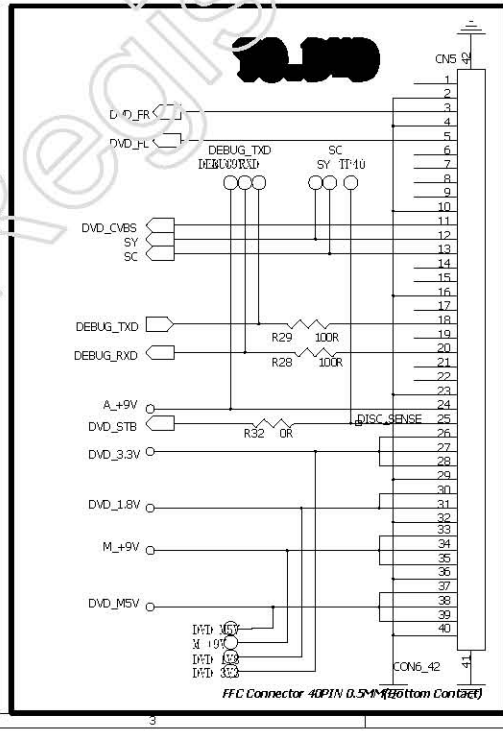

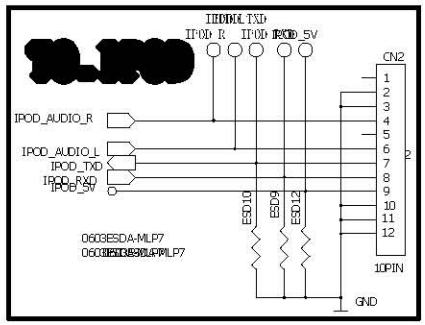

Title			
Size C	Document Number		Rev ?
Date: Thursday, April 28, 2011	Sheet 8 of 9		

UnRegistered