ICOM INSTRUCTIONS

VHF DIGITAL TRANSCEIVERS
IC-F1100D series
UHF DIGITAL TRANSCEIVERS
IC-F2100D series

Thank you for choosing this Icom product.
READ ALL INSTRUCTIONS carefully and completely before using this product.

IMPORTANT

This instruction sheet includes some functions that are usable only when they are preset by your dealer. The transceiver may have other functions and operations that are not described in this instruction sheet. Ask your dealer for preset function details.

EXPLICIT DEFINITIONS

WORD	DEFINITION
⚠ DANGER!	Personal death, serious injury or an explosion may occur.
⚠ WARNING!	Personal injury, fire hazard or electric shock may occur.
CAUTION	Equipment damage may occur.
NOTE	If disregarded, inconvenience only. No risk of personal injury, fire or electric shock.

Icom is not responsible for the destruction, damage to, or performance of any Icom or non-Icom equipment, if the malfunction is because of:
- Force majeure, including, but not limited to, fires, earthquakes, storms, floods, lightning, other natural disasters, disturbances, riots, war, or radioactive contamination.
- The use of Icom transceivers with any equipment that is not manufactured or approved by Icom.

Icom, Icom Inc. and the Icom logo are registered trademarks of Icom Incorporated (Japan) in Japan, the United States, the United Kingdom, Germany, France, Spain, Russia, Australia, New Zealand, and/or other countries.
AquaQuake is a trademark of Icom Incorporated.
AMBE+2 is a trademark and property of Digital Voice Systems Inc.
All other products or brands are registered trademarks or trademarks of their respective holders.

Icom Inc.
1-1-32 Kamiminami, Hirano-ku, Osaka 547-0003, Japan
Jul. 2019

Count on us!

A7456D-1EX-3
Printed in Japan
© 2019 Icom Inc.

FCC INFORMATION

This equipment has been tested and found to comply with the limits for a Class A digital device, pursuant to part 15 of the FCC Rules. These limits are designed to provide reasonable protection against harmful interference when the equipment is operated in a commercial environment. This equipment generates, uses, and can radiate radio frequency energy and, if not installed and used in accordance with the instruction manual, may cause harmful interference to radio communications. Operation of this equipment in a residential area is likely to cause harmful interference in which case the user will be required to correct the interference at his own expense.

CAUTION: Changes or modifications to this transceiver, not expressly approved by Icom Inc., could void your authority to operate this transceiver under FCC regulations.

This device complies with Part 15 of the FCC Rules. Operation is subject to the condition that this device does not cause harmful interference.

RECOMMENDATION

CLEAN THE TRANSCEIVER THOROUGHLY IN A BOWL OF FRESH WATER after exposure to saltwater, and dry it before operating. Otherwise, the transceiver's keys, switches, and controllers may become unusable, due to salt crystallization, and/or the charging terminals of the battery pack may corrode.

NOTE: If the transceiver's waterproof protection appears defective, carefully clean the transceiver with a soft, damp (fresh water) cloth, then dry it before operating. The transceiver may lose its waterproof protection if the case, jack cap, or connector cover is cracked or broken, or the transceiver has been dropped.
Contact your Icom distributor or your dealer for advice.

PRECAUTIONS

⚠ **WARNING! NEVER** use or charge Icom battery packs with non-Icom transceivers or non-Icom chargers. Only Icom battery packs are tested and approved for use with Icom transceivers or charged with Icom chargers. Using third-party or counterfeit battery packs or chargers may cause smoke, fire, or cause the battery to burst.

⚠ **WARNING! NEVER** hold the transceiver so that the antenna is very close to, or touching exposed parts of the body, especially the face or eyes, while transmitting.

⚠ **WARNING! NEVER** operate the transceiver with a headset or other audio accessories at high volume levels. The continuous high volume operation may cause a ringing in your ears. If you experience the ringing, reduce the volume level or discontinue use.

CAUTION: DO NOT short the terminals of the battery pack. Shorting may occur if the terminals touch metal objects such as a key, so be careful when placing the battery packs (or the transceiver) in bags, and so on. Carry them so that shorting cannot occur with metal objects. Shorting may damage not only the battery pack, but also the transceiver.

CAUTION: DO NOT use harsh solvents such as Benzine or alcohol when cleaning. This could damage the equipment surfaces. If the surface becomes dusty or dirty, wipe it clean with a soft, dry cloth.

CAUTION: DO NOT place or leave the transceiver in excessively dusty environments. This could damage the transceiver.

NOTE: DO NOT place or leave the transceiver in areas with temperatures below –25°C (–13°F) or above +55°C (+131°F): ETS version, below –30°C (–22°F) or above +60°C (+140°F): TIA version, or in areas subject to direct sunlight, such as the dashboard.

BE CAREFUL! The transceiver meets IP67* requirements for dust tight and waterproof protection. However, once the transceiver has been dropped, dust protection and splash resistance cannot be guaranteed due to the fact that the transceiver may be cracked, or the waterproof seal damaged, and so on.
* Only when the jack cover, the optional HM-168LWP, HM-171GPW, HS-94LWP, or HS-95LWP is attached.

◇ Battery caution

Misuse of Li-ion batteries may result in the following hazards: smoke, fire, or the battery may rupture. Misuse can also cause damage to the battery or degradation of battery performance.

⚠ **DANGER! NEVER** solder the battery terminals, or NEVER modify the battery pack. This may cause heat generation, and the battery may burst, emit smoke or catch fire.

⚠ **DANGER! NEVER** place or leave battery packs in areas with temperatures above 60°C (140°F). High temperature buildup in the battery cells, such as could occur near fires or stoves, inside a sun-heated vehicle, or in direct sunlight for long periods of time may cause the battery cells to rupture or catch fire. Excessive temperatures may also degrade the battery pack's performance or shorten the battery cell's life.

⚠ **DANGER! NEVER** strike or otherwise impact the battery pack. Do not use the battery pack if it has been severely impacted or dropped, or if the pack has been subjected to heavy pressure. Battery pack damage may not be visible on the outside of the case. Even if the surface of the battery does not show cracks or any other damage, the cells inside the battery may rupture or catch fire.

⚠ **DANGER! NEVER** place battery packs near a fire. Fire or heat may cause them to rupture or explode. Dispose of used battery packs in accordance with local regulations.

⚠ **DANGER! NEVER** let fluid from inside the battery get in your eyes. This can cause blindness. Rinse your eyes with clean water, without rubbing them, and immediately get medical treatment from an eye doctor.

⚠ **WARNING! NEVER** put the battery pack in a microwave oven, high-pressure container, or in an induction heating cooker. This could cause a fire, overheating, or cause the battery cells to rupture.

⚠ **WARNING! NEVER** let fluid from inside the battery cells come in contact with your body. If it does, immediately wash with clean water.

CAUTION: DO NOT continue to use the battery pack if it emits an abnormal odor, heats up, or is discolored or deformed. If any of these conditions occur, contact your Icom dealer or distributor.

CAUTION: DO NOT expose the battery pack to rain, snow, saltwater, or any other liquids. Do not charge or use a wet pack. If the pack gets wet, be sure to wipe it with a clean dry cloth before using.

CAUTION: DO NOT use the battery pack out of the specified temperature range for the transceiver –25°C ~ +55°C (–13°F ~ +131°F): ETS version, –30°C ~ +60°C (–22°F ~ +140°F): TIA version, and the battery itself –20°C ~ +60°C (–4°F ~ +140°F). Using the battery out of its specified temperature range will reduce its performance and battery cell's life. Please note that the specified temperature range of the battery may exceed that of the transceiver. In such cases, the transceiver may not work properly because it is out of its operating temperature range.

CAUTION: DO NOT leave the pack fully charged, completely discharged, or in an excessive temperature environment (above 50°C, 122°F) for an extended period of time. If the battery pack must be left unused for a long time, it must be detached from the transceiver after discharging. You may use the battery pack until the remaining capacity is about half, then keep it safely in a cool and dry place at the following temperature range:

–20°C ~ +50°C (–4°F ~ +122°F) (within a month)
–20°C ~ +40°C (–4°F ~ +104°F) (within three months)
–20°C ~ +20°C (–4°F ~ +68°F) (within a year)

BE SURE to replace the battery pack with a new one approximately five years after manufacturing, even if it still holds a charge. The material inside the battery cells will become weak after a period of time, even with little use. The estimated number of times you can charge the pack is between 300 and 500. Even when the pack appears to be fully charged, the operating time of the transceiver may become short when:
- Approximately 5 years have passed since the pack was manufactured.
- The pack has been repeatedly charged.

◇ Charging caution

⚠ **DANGER! NEVER** charge the battery pack in areas with extremely high temperatures, such as near fires or stoves, inside a sun-heated vehicle, or in direct sunlight. In such environments, the safety/protection circuit in the battery will activate, causing the battery to stop charging.

⚠ **WARNING! NEVER** charge the transceiver during a lightning storm. It may result in an electric shock, cause a fire or damage the transceiver. Always disconnect the power adapter before a storm.

⚠ **WARNING! NEVER** charge or leave the battery in the battery charger beyond the specified time for charging. If the battery is not completely charged by the specified time, stop charging and remove the battery from the battery charger.
Continuing to charge the battery beyond the specified time limit may cause a fire, overheating, or the battery may rupture.

CAUTION: DO NOT insert the transceiver (battery attached to the transceiver) into the charger if it is wet or soiled. This could corrode the battery charger terminals or damage the charger. The charger is not waterproof.

CAUTION: DO NOT charge the battery pack outside of the specified temperature range: 10˚C to 40˚C (50˚F to 104˚F). Icom recommends charging the pack at 25˚C (77˚F). The pack may heat up or rupture if charged out of the specified temperature range. Additionally, pack's performance or battery cell life may be reduced.

SAFETY TRAINING INFORMATION

Your Icom radio generates RF electromagnetic energy while transmitting. This radio is designed for and classified as for "Occupational Use Only." This means it must be used only during the course of employment by individuals aware of the hazards, and the ways to minimize such hazards. This radio is NOT intended for use by the "General Population" in an uncontrolled environment. This radio has been tested and complies with the FCC and IC RF exposure limits for "Occupational Use Only". In addition, your Icom radio complies with the following Standards and Guidelines with regard to RF energy and electromagnetic energy levels and evaluation of such levels for exposure to humans:

- FCC KDB Publication 447498 D03, Evaluating Compliance with FCC Guidelines for Human Exposure to Radio Frequency Electromagnetic Fields.
- American National Standards Institute (C95.1-1992), IEEE Standard for Safety Levels with Respect to Human Exposure to Radio Frequency Electromagnetic Fields, 3 kHz to 300 GHz.
- American National Standards Institute (C95.3-1992), IEEE Recommended Practice for the Measurement of Potentially Hazardous Electromagnetic Fields– RF and Microwave.
- The antennas, batteries, belt clips, speaker-microphone, and other accessories that are listed in "OPTIONS" on this sheet, are authorized for use with this product. Use of accessories other than those specified may result in RF exposure levels exceeding the FCC and IC requirements for wireless RF exposure.
- Health Canada Safety Code 6 - Limits of Human Exposure to Electromagnetic Energy in the Frequency Range from 3 kHz to 300 GHz.

To ensure that your expose to RF electromagnetic energy is within the FCC and IC allowable limits for occupational use, always adhere to the following guidelines:

- **DO NOT** operate the radio without a proper antenna attached, as this may damage the radio and may also cause you to exceed FCC and IC RF exposure limits. A proper antenna is the antenna supplied with this radio by the manufacturer or an antenna specifically authorized by the manufacturer for use with this radio.
- **DO NOT** transmit for more than 50% of the total radio use time ("50% duty cycle"). Transmitting more than 50% of the time can cause FCC and IC RF exposure compliance requirements to be exceeded. The radio is transmitting when the status indicator lights red. You can cause the radio to transmit by pushing the "PTT" switch.
- **ALWAYS keep** the antenna at least 2.5 cm (1 inch) away from the body when transmitting, and only use the Icom belt-clips listed in "OPTIONS" on this sheet when attaching the radio to your belt, or other place, to ensure FCC and IC RF exposure compliance requirements are not exceeded.
The information listed above provides t he user with the information needed to make him or her aware of RF exposure, and what to do to assure that this radio operates within the FCC and IC RF exposure limits of this radio.

- **Electromagnetic Interference/Compatibility**
During transmissions, your Icom radio generates RF energy that can possibly cause interference with other devices or systems. To avoid such interference, turn off the radio in areas where signs are posted to do so. DO NOT operate the transmitter in areas that are sensitive to electromagnetic radiation such as hospitals, aircraft, and blasting sites.
- **Occupational/Controlled Use**
The radio transmitter is used in situations in which persons are exposed as a consequence of their employment, provided those persons are fully aware of the potential for exposure and can exercise control over their exposure.

ABOUT CE AND DOC

Hereby, Icom Inc. declares that the versions of IC-F1100D, IC-F1100DS, IC-F1100DT, IC-F2100D, IC-F2100DS, and IC- F2100DT which have the "CE" symbol on the product, comply with the essential requirements of the Radio Equipment Directive, 2014/53/EU, and the restriction of the use of certain hazardous substances in electrical and electronic equipment Directive, 2011/65/EU. The full text of the EU declaration of conformity is available at the following internet address:
http://www.icom.co.jp/world/support

DISPOSAL

The crossed-out wheeled-bin symbol on your product, literature, or packaging reminds you that in the European Union, all electrical and electronic products, batteries, and accumulators (rechargeable batteries) must be taken to designated collection locations at the end of their working life. Do not dispose of these products as unsorted municipal waste. Dispose of them according to the laws in your area.

VOICE CODING TECHNOLOGY

The AMBE+2™ voice coding Technology embodied in this product is protected by intellectual property rights including patent rights, copyrights and trade secrets of Digital Voice Systems, Inc. This voice coding Technology is licensed solely for use within this Communications Equipment. The user of this Technology is explicitly prohibited from attempting to extract, remove, decompile, reverse engineer, or disassemble the Object Code, or in any other way convert the Object Code into a human-readable form.
U.S. Patent Nos.
#8,595,002, #8,359,197, #8,315,860, #8,200,497, #7,970,606, #6,912,495 B2.

SUPPLIED ACCESSORIES

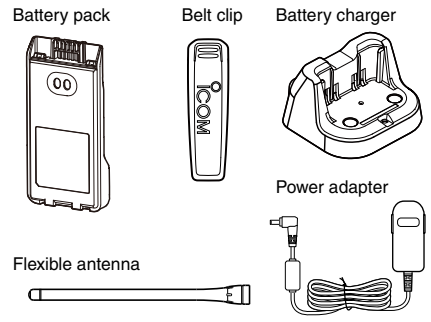

NOTE: Some accessories are not supplied, or the shape is different, depending on the transceiver version.

◇ Battery pack

Attaching:
1. Slide the battery pack in the direction of the arrow. (❶)
2. Push the battery pack until the battery sliding locks make a 'click' sound. (❷)

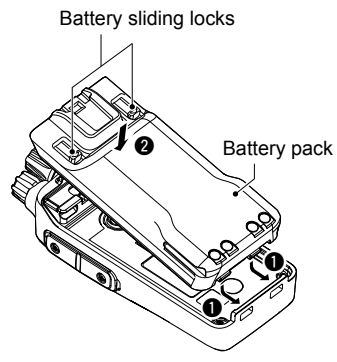

Detaching:
1. Push both battery sliding locks in the direction of the arrow. (❶)
   - The battery pack is then released.
2. Lift up to detach the battery pack. (❷)

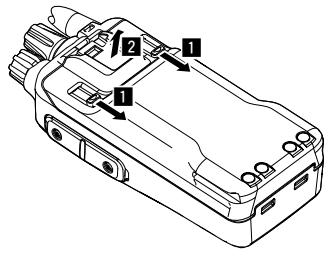

◇ Flexible antenna

Connect the antenna to the antenna connector.

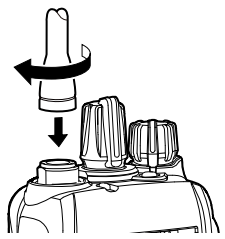

CAUTION:
DO NOT carry the transceiver by holding only the antenna.
- **DO NOT** connect an antenna other than those listed in the "OPTIONS" section.
- Transmitting without an antenna may damage the transceiver.

◇ Belt clip

Attaching:
1. Remove the battery pack from the transceiver, if it is attached.
2. Slide the belt clip in the direction of the arrow until the belt clip is locked and makes a 'click' sound.

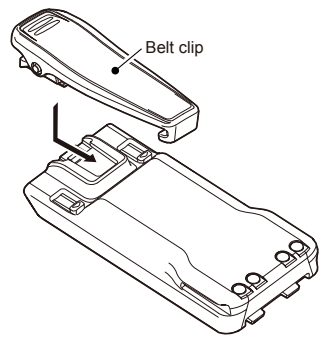

Detaching:
- Lift the tab up (❶), and slide the belt clip in the direction of the arrow (❷).

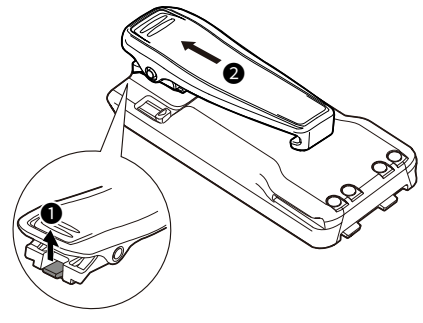

BE CAREFUL! DO NOT break your fingernail.

PANEL DESCRIPTION

There are 3 types of transceivers in the IC-F1100D and IC-F2100D series.

- **IC-F1100D / IC-F2100D:** Non-display type
- **IC-F1100DS / IC-F2100DS:** Simple key type
- **IC-F1100DT / IC-F2100DT:** Ten-key type

The illustration below shows the Ten-key type transceiver.

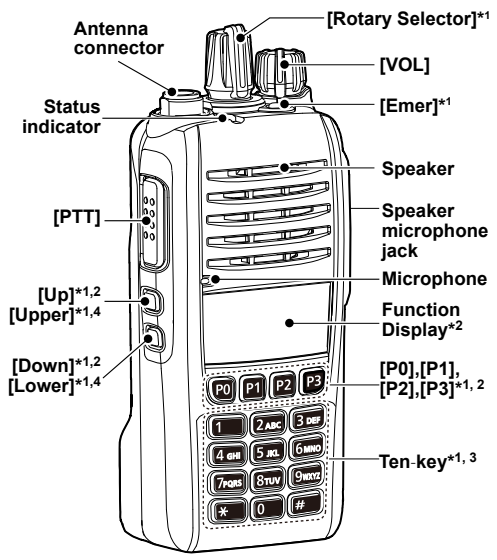

*1: Dealer assignable.
*2: Only for the Simple key and Ten-key types.
*3: Only for the Ten-key type.
*4: Only for the Non-Display type.

◇ Status indicator

Lights red:	Transmitting.
Lights green:	Receiving or squelch is open.
Lights or blinks orange:	A matching signal is received, depending on the presetting.
Slowly blinks green:	The battery should be charged.
Blinks green fast:	The battery must be charged.

◇ Speaker microphone jack

CAUTION: DO NOT use the transceiver without the jack cover or the optional equipment attached.
The transceiver meets IP67 requirements for dust-tight and waterproof protection only when the jack cover or the optional HM-168LWP, HM-171GPW, HS-94LWP, or HS-95LWP is attached.

◇ Function display

(For only the Simple key and Ten-key types)

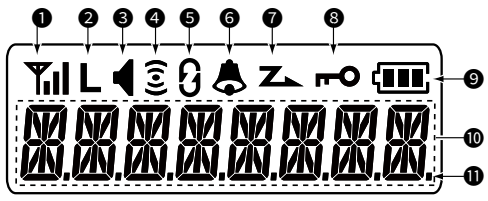

❶ **SIGNAL STRENGTH INDICATOR**
Displays the relative receive signal strength level.

❷ **LOW POWER ICON**
Displayed when low output power is selected.

❸ **AUDIBLE ICON**
- Displayed when the channel is in the 'Audible' (unmuted) mode.
- Displayed when a matched 2-Tone or 5-Tone is received.

❹ **GPS ICON**
Displayed when the GPS signal is received, depending on the presetting.

❺ **ENCRYPTION / SCRAMBLER ICON**
For the NXDN models: Displayed when the Encryption function is ON.
For the dPMR models: Displayed when the Scrambler function is ON.

❻ **BELL ICON**
Displayed or blinks when a matching signal is received, depending on the presetting.

❼ **SCAN ICON**
Displayed or blinks while scanning.

❽ **KEY LOCK ICON**
Displayed when the Key Lock function is ON.

❾ **BATTERY INDICATOR**
- Displays the remaining battery charge.
- Blinks when the battery charge decreases to a set level.

Indication				
Battery Status	Full	Mid	Charging required	Battery exhausted

❿ **ALPHANUMERIC READOUT**
Displays messages such as channel text.

⓫ **SHIFT INDICATOR**
Displayed when [Shift] is pushed.

BATTERY CHARGING

NOTE: Before detaching or attaching a battery pack, BE SURE to turn OFF the transceiver by rotating [VOL] fully counter clockwise, until it makes a "click" sound. Otherwise, a transceiver malfunction could occur.

◇ Rapid charging with the BC-213

You can rapidly charge the Li-ion battery pack with the BC-213.

Charging time:
Approximately 3.5 hours for the BP-280

Additionally needed item (purchase separately):
- A power adapter (may be supplied with the charger, depending on the charger version).

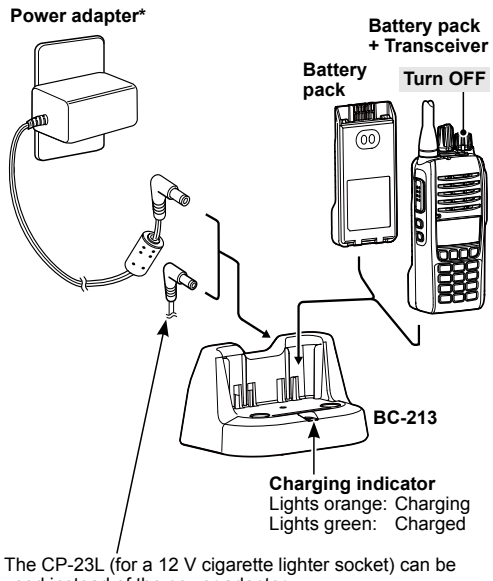

The CP-23L (for a 12 V cigarette lighter socket) can be used instead of the power adapter.

* A different type, or no power adapter is supplied, depending on the charger version.

NOTE: If the charging indicator alternately blinks green and orange, remove the battery pack or the transceiver from the charger, then reinsert it.

◇ Rapid charging with the BC-214

You can rapidly and simultaneously charge up to 6 battery packs with the optional BC-214 (the AD-130 CHARGER ADAPTERS are installed.)

Charging time:
Approximately 3.5 hours for the BP-280

Additionally needed item (purchase separately):
- The BC-157S AC ADAPTER or the OPC-656 DC POWER CABLE

CAUTION: DO NOT reverse the polarity when connecting the OPC-656 to a power source. This will ruin the battery charger.
Red: ⊕, Black: ⊖

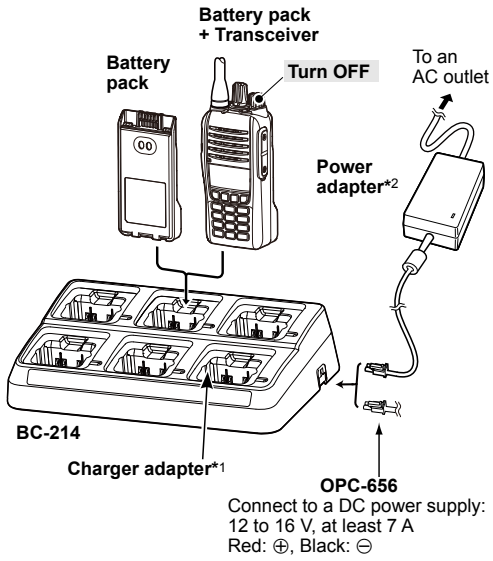

*1: Charger adapter's shape may differ, depending on the charger version.
*2: A different type, or no power adapter is supplied, depending on the charger version.

NOTE: The BC-214 has a charging timer that stops charging after approximately 5.3 hours of charging.

BASIC OPERATION

◇ Turning ON the transceiver

NOTE: Before using the transceiver for the first time, the battery pack must be fully charged for optimum life and operation. See the BATTERY CHARGING section.

- Rotate [VOL] to turn ON the transceiver.

◇ Receiving and Transmitting

Receiving:
1. Select a channel.
   ⓘ Rotate [Rotary Selector] or push [CH Up] or [CH Down], depending on the presetting.
2. When receiving a call, rotate [VOL] to adjust the audio output level to a comfortable listening level.

NOTE: Depending on the presetting, the transceiver may automatically transmit the microphone audio for the preset time period when a matching signal is received. (Auto TX function)

Transmitting:

CAUTION: Attach an antenna before transmitting. Transmitting without an antenna may damage the transceiver.

1. Wait until the channel is clear to avoid interference.
2. While holding down [PTT], speak at your normal voice level.
3. Release [PTT] to receive.

IMPORTANT:
To maximize the readability of your signal:
1. After pushing [PTT], pause briefly before you start speaking.
2. Hold the microphone 5 to 10 cm (2 to 4 inches) from your mouth, then speak at your normal voice level.

◇ Key Lock function

You can use the Key Lock function to prevent accidental channel changes and unnecessary function access, depending on the presetting.

All assignable keys except the following are electronically locked: [Monitor], [Call], [Call A], [Call B], [Emergency], [Light], [Lock], [Lone Worker], [Siren], [Surveillance], [Sp. Func 1], [Sp. Func 2], [Shift], [Clear]*, and [PTT].
* : For only the dPMR models.
You can also make or receive calls, or turn the transceiver ON or OFF, during the Key Lock function is ON.

- Hold down [Lock] for 1 second to turn the Key Lock function ON or OFF.
  For only the Simple-key and Ten-key types:
  - "🔑" is displayed when the Key Lock function is ON.
  - "🔑" disappears when the Key Lock function is OFF.

◇ AquaQuake™ Water Draining function

If the [AquaQuake] is assigned to a key, the AquaQuake Water Draining function clears water from the speaker grill to maintain clear audio by vibrating the speaker cone.

1. Hold down [AquaQuake] to turn ON the AquaQuake water draining function.
   - A low frequency vibration is generating to remove water from the speaker grill.
   - Water in the speaker grill may muffle the sound coming from the speaker.
2. Release the key to turn OFF the function.

NOTE:
- After the specified period of time expires, this function automatically stops, even if a user continues to hold down this key.
- This key works for only the internal speaker.

OPTIONS

◇ BATTERY PACKS

- **BP-278/BP-279/BP-280** BATTERY PACKS

Output Power: 4 W versions

Battery pack	Voltage	Capacity	Approximate battery life*
BP-278	7.2 V	1130 mAh (minimum) 1190 mAh (typical)	9 hours
BP-279	7.2 V	1485 mAh (minimum) 1570 mAh (typical)	11.5 hours
BP-280	7.2 V	2280 mAh (minimum) 2400 mhA (typical)	18 hours

Output Power: 5 W versions

Battery pack	Voltage	Capacity	Approximate battery life*
BP-278	7.2 V	1130 mAh (minimum) 1190 mAh (typical)	8.5 hours
BP-279	7.2 V	1485 mAh (minimum) 1570 mAh (typical)	11 hours
BP-280	7.2 V	2280 mAh (minimum) 2400 mhA (typical)	17 hours

* When the power save function is turned ON, and the operating periods are calculated under the following conditions.
TX : RX : standby = 5 : 5 : 90

◇ CHARGERS

- **BC-213** DESKTOP CHARGER **+ BC-123S** AC ADAPTER
  To rapidly charge a single battery pack.
- **BC-214** MULTI CHARGER **+ BC-157S** AC ADAPTER
  To rapidly charge up to 6 battery packs.

◇ DC CABLES

- **CP-23L** CIGARETTE LIGHTER CABLE
  Use when charging the battery pack from a 12 V cigarette lighter socket. (Use with the BC-213)
- **OPC-656** DC POWER SOCKET
  Use with a 13.8 V power source instead of the power adapter. (Use with the BC-214)

◇ ANTENNAS

- **FA-SC25V/FA-SC28V/FA-SC29V/FA-SC55V** VHF ANTENNAS
  FA-SC25V: 136–150 MHz
  FA-SC28V: 148–162 MHz
  FA-SC29V: 160–174 MHz
  FA-SC55V: 150–174 MHz
- **FA-SC26VS/FA-SC27VS/FA-SC56VS/FA-SC57VS** VHF STUBBY ANTENNAS
  FA-SC26VS: 136–144 MHz
  FA-SC27VS: 142–150 MHz
  FA-SC56VS: 150–162 MHz
  FA-SC57VS: 160–174 MHz
- **FA-SC61VC** VHF CUT ANTENNA
  FA-SC61VC: 136–174 MHz
- **FA-SC25U/FA-SC57U/FA-SC72U/FA-SC73US** UHF ANTENNAS
  FA-SC25U: 400–430 MHz
  FA-SC57U: 430–470 MHz
  FA-SC72U: 470–520 MHz
  FA-SC73US: 450–490 MHz
- **FA-SC26US** UHF STUBBY ANTENNAS
  FA-SC26US: 400–450 MHz
- **FA-SC01U/FA-SC02U** UHF ANTENNAS
  FA-SC01U: 350–400 MHz
  FA-SC02U: 330–380 MHz
- **FA-SC61UC** UHF CUT ANTENNAS
  FA-SC61UC: 380–520 MHz

◇ OTHERS

- **MB-130** CHARGER BRACKET
  Mounts the BC-213 desktop charger on a variety of places in a vehicle.
- **MB-133** BELT CLIP
- **HM-158LA/HM-159LA/HM-168LWP/HM-171GPW** SPEAKER MICROPHONE
  Combination speaker-microphone that provides convenient operation while the transceiver is hanging on your belt.
  The HM-171GPW includes high-performance GPS receiver.
  ⓘ Adjust the microphone gain before use.
- **HM-153LA/HM-166LA** EARPHONE MICROPHONE
  Ideal for hands-free operation. Clip the HM-153LA or HM-166LA (with integrated PTT switch) to your lapel or breast pocket.
  ⓘ Adjust the microphone gain before use.
- **HS-94/HS-95/HS-97** HEADSET **+ VS-4LA** PTT SWITCH CABLE/**OPC-2004LA** ADAPTER CABLE
  HS-94: Ear-hook type
  HS-95: Neck-arm type
  HS-97: Throat microphone
  VS-4LA: To connect to headsets
  OPC-2004LA: To connect to headsets for VOX operation
  ⓘ Adjust the both microphone and VOX gain before use.
- **HS-94LWP/HS-95LWP** HEADSET
  HS-94LWP: Ear-hook type
  HS-95LWP: Neck-arm type
  ⓘ Adjust the both microphone and VOX gain before use.

Some options may not be available in some countries.
Ask your dealer for details.