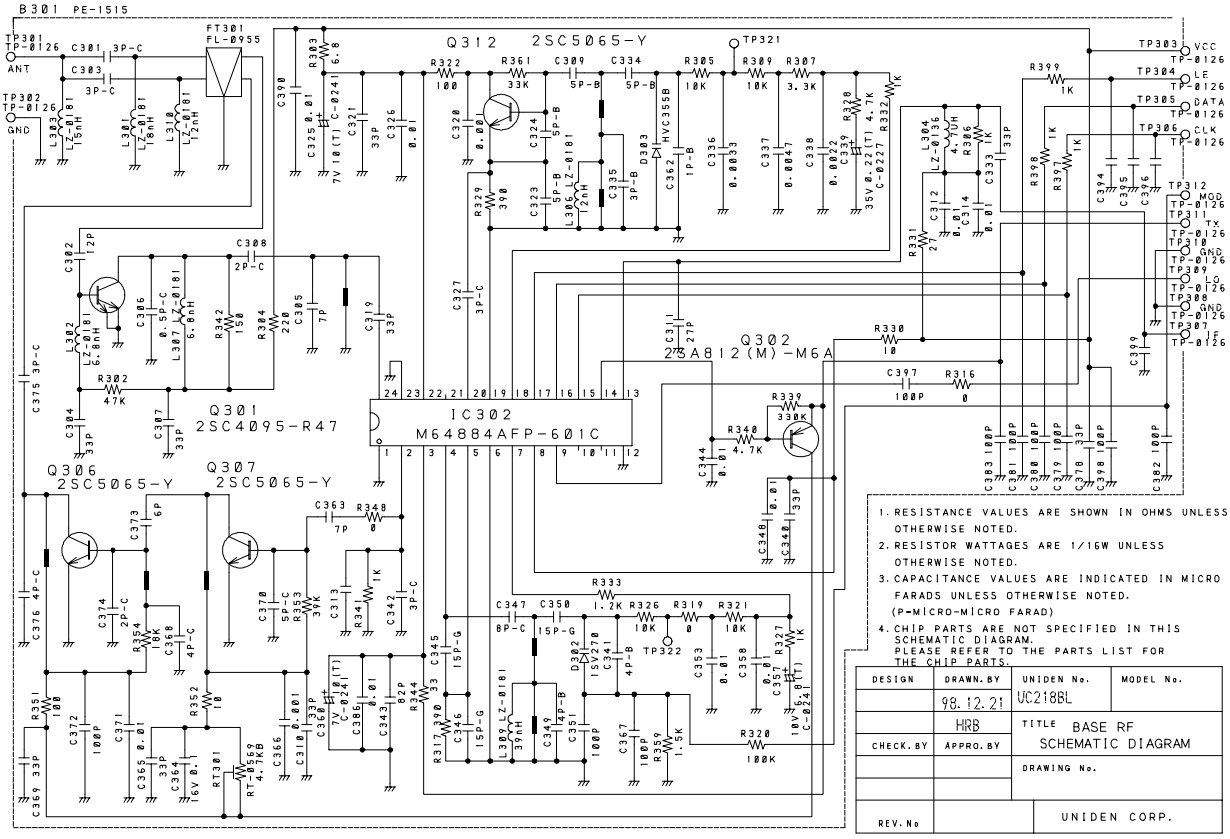

1. RESISTANCE VALUES ARE SHOWN IN OHMS UNLESS OTHERWISE NOTED.
2. RESISTOR WATTAGES ARE 1/16W UNLESS OTHERWISE NOTED.
3. CAPACITANCE VALUES ARE INDICATED IN MICRO FARADS UNLESS OTHERWISE NOTED. (P-MICRO-MICRO FARAD)
4. CHIP PARTS ARE NOT SPECIFIED IN THIS SCHEMATIC DIAGRAM. PLEASE REFER TO THE PARTS LIST FOR THE CHIP PARTS.

DESIGN	DRAWN. BY	UNIDEN No.	MODEL No.
	98.12.21	UC218BL	
	HRB	TITLE BASE RF SCHEMATIC DIAGRAM	
CHECK. BY	APPRO. BY		
		DRAWING No.	
REV. No		UNIDEN CORP.	